AFQTP 3E1X1-21
13 DECEMBER 2002

AIR FORCE
QUALIFICATION TRAINING PACKAGE (AFQTP)

FOR

HEATING, VENTILATION, AIR CONDITIONING/REFRIGERATION (HVAC/R) (3E1X1)

MODULE 21

AIR CONDITIONING & REFRIGERATION SYSTEMS

TABLE OF CONTENTS

MODULE 21

AIR CONDITIONING & REFRIGERATION SYSTEMS

AFQTP GUIDANCE

INTRODUCTION 21-3

AFQTP UNIT 3

PROCESS REFRIGERANTS IAW EPA AND AIR FORCE STANDARDS

LOCATE REFRIGERANT LEAKS (21.3.1.) 21-4
RECOVER, RECYCLE, AND RECLAIM REFRIGERANTS FROM REFRIGERATION AND AIR CONDITIONING SYSTEMS (21.3.3.) 21-12
PUMP DOWN REFRIGERATION SYSTEMS (21.3.4.) 21-22
PRESSURE CHECK REFRIGERATION SYSTEMS (21.3.5.) 21-28
CHARGE HVAC/R SYSTEMS WITH REFRIGERANT (21.3.6.) 21-34

AFQTP UNIT 5

OPERATING PRINCIPLES & CONSTRUCTION FEATURES
AIR CONDITIONING SYSTEMS

PLOT PRESSURE ENTHALPY CHART FOR REFRIGERATION CYCLE (21.5.3.7.) 21-41
MEASURE AIR CONDITIONING AND REFRIGERATION SYSTEM EFFICIENY USING PRESSURE-TEMPERATURE CHARTS (21.5.3.8.) 21-47
CALCULATE AND ADJUST SUPERHEAT (21.5.3.9.) 21-53
CALCULATE SUBCOOLING (21.5.3.10.) 21-59

REVIEW ANSWER KEY KEY-1

CORRECTIONS/IMPROVEMENT LETTER ..... APPENDIX A

Career Field Education and Training Plan (CFETP) references from 1 July 2002 version.

OPR: HQ AFCESA/CEOF
(SMSgt Dan Sacks)
Supersedes AFQTP 3E1X1-21, 30 Jun 00

Certified by: HQ AFCESA/CEOF
(CMSgt Myrl F. Kibbe)
Pages: 71/Distribution F

Notice. This AFQTP is *NOT* intended to replace the applicable technical references nor is it intended to replace hands-on training. It is to be used in conjunction with these for training purposes only.

AIR FORCE QUALIFICATION TRAINING PACKAGES
FOR
HEATING, VENTILATION, AIR CONDITIONING/REFRIGERATION (HVAC/R)

(3E1X1)

INTRODUCTION

Before starting this AFQTP, refer to and read the **"**AFQTP TRAINER/TRAINEE GUIDE**."**

AFQTPs are mandatory and must be completed to fulfill task knowledge requirements on core and diamond tasks for upgrade training. ***It is important for the trainer and trainee to understand*** that an AFQTP ***does not*** replace hands-on training, nor will completion of an AFQTP meet the requirement for core task certification. AFQTPs will be used in conjunction with applicable technical references and hands-on training.

AFQTPs and Certification and Testing (CerTest) must be used as minimum upgrade requirements for Diamond tasks.

MANDATORY minimum upgrade requirements:

Core task:
AFQTP completion
Hands-on certification

Diamond task:
AFQTP completion
CerTest completion (80% minimum to pass)

Note*: Trainees will receive hands-on certification training for Diamond Tasks when equipment becomes available either at home station or at a TDY location*.

Put this package to use. Subject matter experts, under the direction and guidance of HQ AFCESA/CEOF, revised this AFQTP. If you have any recommendations for improving this document, please contact the HVAC/R Career Field Manager at the address below.

HQ AFCESA/CEOF
139 Barnes Dr. Suite 1
Tyndall AFB, FL 32403-5319
DSN: 523-6445, Comm: (850) 283-6445
Fax: DSN 523-6488
Or E-mail: ceof.helpdesk@tyndall.af.mil

Notice. This AFQTP is *NOT* intended to replace the applicable technical references nor is it intended to replace hands-on training. It is to be used in conjunction with these for training purposes only.

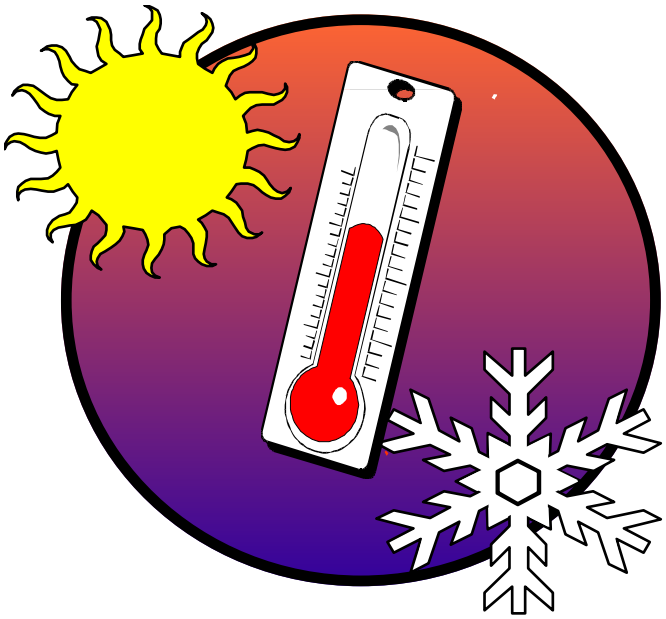

PROCESS REFRIGERANTS IAW EPA AND AIR FORCE STANDARDS

MODULE 21 AFQTP UNIT 3

LOCATE REFRIGERANT LEAKS (21.3.1.)

Notice. This AFQTP is *NOT* intended to replace the applicable technical references nor is it intended to replace hands-on training. It is to be used in conjunction with these for training purposes only.

LOCATE REFRIGERANT LEAKS

Task Training Guide

STS Reference Number/Title:	21.3.1. - Locate refrigerant leaks.
Training References:	1. Modern Refrigeration and Air Conditioning, 1996, Chapter 12, Paragraph 12.9: *Locating Refrigerant Leaks*. 2. Career Development Course (CDC) HVAC/R Journeyman 3E151F, Volume 2, Section 2-2, Lesson 209: *Mechanical Problems Associated with Refrigeration Systems*
Prerequisites:	1. **Possess a minimum of a 3E131 AFSC.** 2. **Review the following references:** 2.1. Modern Refrigeration and Air Conditioning, Chapter 12, Paragraph 12.9. *Locating Refrigerant Leaks* 2.2. Career Development Course (CDC) HVAC/R Journeyman 3E151F, Volume 2, Section 2-2, Lesson 209.
Equipment/Tools Required:	1. Protective personnel equipment (PPE). 2. HVAC/R tool bag. 3. Manifold gauge assembly (MGA). 4. Leak detecting soap. 5. Electronic leak detector.
Learning Objective:	Trainee will know the methods of locating leaks in a refrigerant system.
Samples of Behavior:	Trainee will know how to locate leak in a refrigerant system.
Notes:	
Any safety violation is an automatic failure.	

Notice. This AFQTP is *NOT* intended to replace the applicable technical references nor is it intended to replace hands-on training. It is to be used in conjunction with these for training purposes only.

LOCATE REFRIGERANT LEAKS

1. Background. Refrigeration systems must be absolutely gas tight for two reasons. First, any leakage will result in loss of the refrigerant charge. Second, leaks allow air and moisture to enter the system. Leaks can occur from not only connections or fittings not properly made at the time of the original installation, but also from line breakage due to vibration, gasket failure, or other operating malfunctions. A recent study by a major user of commercial equipment revealed that of approximately 3,000 service calls made during a typical years operation, 1 out of 10 were required because of refrigerant leaks. Since leak detection is such a common service complaint, it is essential that the service specialist check the system carefully to insure that it is gas tight before charging with refrigerant.

1.1. The Environmental Protection Agency (EPA) established regulations when leaks must be repaired or the owner and possibly the technicians will be held responsible. For any appliance containing more than 50 pounds of refrigerant, the owner must keep a record of all refrigerant charged into that appliance.

1.2. For commercial and industrial process refrigeration systems, when the leak rate exceeds 35% of the system charge per year, it must be repaired. For any other appliance, the leak rate is 15% before it has to be repaired. All leaks must be repaired within 30 days or the owner must develop a plan to scrap or retrofit the appliance with an environmental safe refrigerant within 1 year.

2. Leak Indicators. If you suspect a leak on an appliance, an abnormally low manifold gage pressures, and/or excessive superheat could validate your suspicion. Manifold gage pressures abnormally low, and/or excessive superheat could be indicators. These are common symptoms however, by no means are these indicators absolute. Remember, if a normally operating system suddenly experienced a reduction in refrigerant, it's highly probable a leak exist. The challenge is to locate the leak, then repair it.

2.1. An obvious method of locating leaks is to look for oil traces or residue on the appliance's refrigerant connections. On open type compressors, always check the shaft seal where the crankshaft protrudes through the compressor casing housing.

2.2. The failure of a system to hold a vacuum after being evacuated indicates that the system has a leak. To locate the leak during this situation the system must be pressurized.

> **NOTE:**
> Schrader type valves should be inspected to insure the stem is not bent or leaking.

2.3. Currently, the law specifies that leak checking will be done using a pressurized inert gas that is environmentally safe such as nitrogen. Pressurizing newly installed split systems or built-up systems with Hydro chlorofluorocarbons (HCFC) or Chlorofluorocarbons (CFC) refrigerants for leak checking are prohibited by U.S. law.

Notice. This AFQTP is *NOT* intended to replace the applicable technical references nor is it intended to replace hands-on training. It is to be used in conjunction with these for training purposes only.

3. Types of Leak Detectors. There are varieties of leak detection devices used in the HVAC industry; however, this lesson will only discuss the three most common types.

3.1. Soap Solution. The liquid bubble type leak indicator is a mixture of soap and water using sudsy type soap. When using this type of leak indicator do not shake the soap solution bottle. It works far better when applied as a liquid. Swab the suspected leak with liquid soap or detergent, and bubbles will appear if a leak exists.

NOTE:
The bubble type method is not as easy to use as the electronic type leak detector, since it only locates large leaks, but it is an excellent method to check and pinpoint leaks.

3.2. Electronic. These leak detectors measure the resistance of gas samples. The probe of this detector is passed around the suspected leak very slowly. It will get you in the general area of the leak. Most of the electronic type detectors give a visible and audible indication when sensing refrigerant vapor. These instruments will detect a leak at the rate of $^1/_2$ oz per year. Because of their extreme sensitivity, electronic detectors can only be used in a clean atmosphere not contaminated by refrigerant vapor, smoke, vapor from carbon tetrachloride, or other solvents, which may give a false reaction.

3.3. Ultra-Sonic. This type of leak detector is also known as a general area leak detector (the same as the electronic). The benefit of this detector is its inherent ability to detect a leak regardless of the gas used to pressurize the system.

4. Procedures for Detecting Leaks. Methods for leak detection changed when the EPA enacted regulations under the Clean Air Act. It is now illegal to pressurized systems with CFC and HCFCs chemicals.

4.1. In the event of a complete lost of system charge, inert gas (not refrigerant) should be use to pressurized system to disclose leaking areas(s).

4.2. When a trace gas must be used to locate a leak that can't be found by other means, R-22 is the only type of refrigerant that's approved by the EPA. This refrigerant is less harmful to the atmosphere as compared to some of the other refrigerants.

CAUTION:
TEST PRESSURES SHOULD BE ADJUSTED TO APPROXIMATELY 150 PSIG (PRESSURE PER SQUARE INCH GAGE), HOWEVER, DO NOT EXCEED THE NAMEPLATE MAXIMUM TEST PRESSURE RATING.

4.3. Some of the advantages of using a combination of refrigerant (R-22) and nitrogen are:

4.3.1. Nitrogen is less expensive than refrigerant.

4.3.2. Test pressures are easier to control.

4.3.3. Nitrogen will leak at a rate approximately twice as fast as R-22 through the same size hole at the same pressure.

4.3.4. The electronic leak detector may be used to locate the leak.

4.4. If only nitrogen is used to pressurize the system, your choice of leak detecting devices is limited.

Notice. This AFQTP is *NOT* intended to replace the applicable technical references nor is it intended to replace hands-on training. It is to be used in conjunction with these for training purposes only.

4.5. Nitrogen from a nitrogen cylinder, complete with a pressure regulator and a pressure-relief valve, can be put into the system through the center hose of a gauge manifold similar to the hookup for charging. The pressure in a nitrogen cylinder could be as high as 3,000 psig, so the pressure regulator and pressure-relief valve must be used and must be set for the right pressure. In most cases, the equipment nameplate will give the recommended test pressure. If the test pressure is not known, **NEVER** exceed 150-psig pressures when pressuring a system. Leak testing can commence once desired pressure is inserted and equalized.

SAFETY:

ALWAYS USE A GAUGE EQUIPPED PRESSURE REGULATOR ON THE HIGH PRESSURE NITROGEN GAS AND NEVER INTERCONNECT THE REFRIGERANT CYLINDER AND THE NITROGEN GAS CYLINDER THROUGH A GAUGE MANIFOLD. NITROGEN CYLINDER PRESSURES CAN RUPTURE A REFRIGERANT CYLINDER.

TO ADVOID AN EXPLOSION, NEVER USE OXYGEN OR COMPRESSED AIR MIXED WITH REFRIGERANTS TO LEAK TEST.

4.6. Nitrogen is the inert gas that is certified safe for pressurizing, dehydration, and purging procedures for any refrigeration system, but there are safety precautions that must be followed. Nitrogen cylinders are under very high pressures (as high as 3,000 psi). 3,000 psi is enough to blow apart any hermetic compressor or other system component. Most refrigeration appliances will only have a certified burst pressure of 500 psig, 3,000 psig far exceeds this pressure.

4.7. Never install pressure regulators in series with each other to increase the volume. If you require an increased volume of nitrogen to complete your work, always install the pressure regulators parallel to each other.

SAFETY:

IF A VAVLE DEVELOPED CORROSION, REPLACE IT. <u>DO NOT</u> ATTEMT TO TAKE IT APART AND CLEAN IT. THIS WOULD VOID THE CERTIFICATION. THIS WOULD ALSO EXPOSE THE MECHANIC TO DANGERS THAT A DEFECTIVE VALVE COULD CAUSE.

5. Procedures. Follow these steps to properly detect leaks:

Step 1: Observe safety precautions.

1.1. Remove jewelry.

1.2. Don safety equipment.

Step 2: Pressurize system.

2.1. Install manifold gauge assembly (MGA).

2.2. Connect center hose of MGA to refrigerant cylinder (if tracer gas is needed).

2.3. Bleed hoses.

2.4. Open refrigerant cylinder valve and open **low side** MGA hand valve until 10 psi is in system.

Notice. This AFQTP is *NOT* intended to replace the applicable technical references nor is it intended to replace hands-on training. It is to be used in conjunction with these for training purposes only.

2.5. Close refrigerant cylinder valve and close **low side** MGA hand valve.

2.6. Disconnect center hose of MGA from refrigerant cylinder and connect to nitrogen cylinder.

2.7. Bleed hose.

2.8. Verify regulator diaphragm is not engage (stem turns freely).

2.9. Open cylinder valve, regulator 1st-stage gauge should indicate cylinder pressure.

2.10. Position body away from regulator and turn nitrogen regulator clockwise until 2nd-stage regulator indicates 40-psi.

2.11. Open **low side** MGA hand valve until 40 psi is in system.

2.12. Allow system pressure to stabilize.

Step 3: Locate leak with detection device(s).

3.1. Soap Bubble Method.

3.1.1. Apply mixture as a liquid to most suspicious leaking areas of the system first.

3.1.1.1. Any mechanical connection (valve, bolt, flare nut, or compression fitting).

3.1.1.2. Any soldered connection.

3.1.1.3. Long tube runs.

3.1.2. Watch and wait for the leak to cause the bubbles to expand and pop.

3.1.3. Mark/score (chalk, file, paint) the area of the leak.

3.1.4. Remove the soap solution from all the locations it was placed.

3.2. Electronic Method.

3.2.1. Make sure that the area is not overly saturated with refrigerant or solvents. Open area to vent harmful fumes outside of the room.

3.2.2. Insure that you have a fresh filter installed on the sensor.

3.2.3. ***SLOWLY*** pass the sensor over the most suspicious areas first.

3.2.3.1. Any mechanical connection.

3.2.3.2. Any soldered connection.

3.2.3.3. Long tube runs.

3.2.4. Watch and listen for the detector to indicate the presence of a leak.

3.2.5. When the detector signals the presence of a leak, remove the detector from the area and slowly approach it again.

3.2.6. If you get an indication in the same area, mark it.

Step 4: Repair leak and repeat steps 2.1. – 2.3. until desire result is achieved.

Step 5: Clean-up area once desired result is achieved.

Notice. This AFQTP is *NOT* intended to replace the applicable technical references nor is it intended to replace hands-on training. It is to be used in conjunction with these for training purposes only.

REVIEW QUESTIONS
FOR
LOCATE REFRIGERANT LEAKS

QUESTION	ANSWER
1. Refrigeration systems must be absolutely gas tight.	a. True. b. False.
2. What must the service specialist check before charging a system?	a. Check to insure tools are put away. b. Make sure everything is plugged in. c. Check the power source. d. Check to insure all leaks have been repaired.
3. For any appliance containing more than _____ pounds of refrigerant, the owner must keep a record of all refrigerant charged into that appliance.	a. 50 b. 55 c. 5 d. .50
4. Pressurizing newly installed split systems or built-up systems with HCFC or CFC refrigerants for leak checking is a standard practice.	a. True. b. False.
5. What are three of the most commonly used leak detectors in the HVAC/R field?	a. Soap bubbles, vacuum pump, and nitrogen. b. Nitrogen, vacuum pump, and ultra-sonic. c. Ultra-sonic, soap bubbles, and electronic. d. Electronic, soap bubbles, and nitrogen.
6. When leak checking, how much refrigerant do you introduce into the system?	a. Until the gauge reads 20 psi. b. Until the gauge reads 15 psi. c. Until the gauge reads 10 psi. d. Until the gauge reads 5 psi.
7. You must never place two nitrogen regulators in parallel.	a. True. b. False.
8. What two components must be used with nitrogen cylinders?	a. Compound gauges and PT-Chart. b. Compound gauges and ball valve. c. Ball valve and pressure relief valve. d. Regulator and pressure relive valve.

Notice. This AFQTP is *NOT* intended to replace the applicable technical references nor is it intended to replace hands-on training. It is to be used in conjunction with these for training purposes only.

LOCATE REFRIGERANT LEAKS

PERFORMANCE CHECKLIST

INSTRUCTIONS:

The trainee must satisfactorily perform all parts of the task without assistance. Evaluate the trainee's performance using this checklist.

NOTE TO TRAINER/CERTIFIER:

Items 4.2. and 4.3. are dependent on the type of detector used. Some detectors have only audible indicators while some have both audible and visual.

DID THE TRAINEE….	YES	NO
1. correctly connect regulators and gauges?		
2. correctly pressurized system?		
3. demonstrate proper use of soap bubbles by: 3.1. swabbing on suspected leak (did not shake or pour)? 3.2. looking for the presence of bubbles?		
4. demonstrate proper use of electronic leak detector by: 4.1. probing area slowly? 4.2. listen for change in audible indication? 4.3. looking for change in visual indication?		
5. comply with all safety requirements?		

FEEDBACK: Trainer/Certifier should provide both positive and/or negative feedback to the trainee immediately after the task is performed. This will ensure the issue is still fresh in the mind of both the trainee and trainer/certifier.

Notice. This AFQTP is *NOT* intended to replace the applicable technical references nor is it intended to replace hands-on training. It is to be used in conjunction with these for training purposes only.

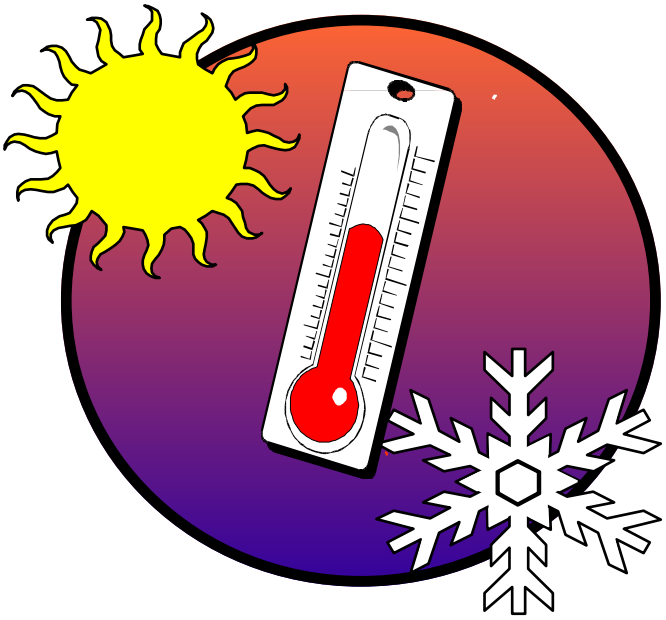

PROCESS REFRIGERANTS IAW EPA AND AIR FORCE STANDARDS

MODULE 21 AFQTP UNIT 3

RECOVER AND RECYCLE REFRIGERANTS FROM REFRIGERATION AND AIR CONDITIONING SYSTEMS (21.3.3.)

Notice. This AFQTP is *NOT* intended to replace the applicable technical references nor is it intended to replace hands-on training. It is to be used in conjunction with these for training purposes only.

RECOVER AND RECYCLE REFRIGERANTS FROM REFRIGERATION AND AIR CONDITIONING SYSTEMS

Task Training Guide

STS Reference Number/Title:	21.3.3. - Recover and recycle refrigerants from refrigeration and air conditioning systems.
Training References:	1. Modern Refrigeration and Air Conditioning, 1996, Chapter 10: *Refrigerant Recovery/Recycling/Reclaiming*. 2. Career Development Course (CDC) HVAC/R Journeyman 3E151F, Volume 1, Unit 1, Section 1-2, Lesson 008: *Refrigerant Processing Requirements*.
Prerequisites:	1. **Possess as a minimum a 3E131 AFSC.** 2. **Possess a Universal Refrigerant Handling Card.** 3. **Review the following references:** 3.1. Modern Refrigeration and Air Conditioning, Chapter 10. 3.2. Career Development Course (CDC) HVAC/R Journeyman 3E151F, Volume 1, Unit 1, Section 1-2, Lesson 008.
Equipment/Tools Required:	1. Personal protective equipment (PPE). 2. HVAC/R tool bag. 3. Manifold gauge assembly (MGA). 4. Recovery/Recycling Unit. 5. Recovery Cylinder. 6. Operational A/C or Refrigeration Appliance.
Learning Objective:	Trainee will demonstrate knowledge of the standards and procedures set by the Environmental Protection Agency (EPA) and the Air Force for recovering and recycling refrigerants.
Samples of Behavior:	Trainee will recover and recycle refrigerants from refrigeration and air conditioning systems.
Suggested Additional Reading:	1. Trane Air Conditioning Manual. 2. EPA revision for section 608 of the clean air act. 3. Air Conditioning and Refrigeration Institute (ARI)-740-1993 protocol or Appendix C of the final rule.
Notes:	
Any safety violation is an automatic failure.	

Notice. This AFQTP is *NOT* intended to replace the applicable technical references nor is it intended to replace hands-on training. It is to be used in conjunction with these for training purposes only.

RECOVER AND RECYCLE REFRIGERANTS FROM REFRIGERATION AND AIR CONDITIONING SYSTEMS

1. Background. Recovery, recycling, and reclaiming refrigerant are defined as the act or acts of removing, cleaning, and processing refrigerant. Any technician opening a system for servicing must use certified recovery equipment, it's the Law and the Environmental Protection Agency (EPA) enforces it. The HVAC/R technician must follow all state and local laws, Air Force instructions, and must be certified as a Universal Technician. A Universal Technician is defined by the EPA as someone who can work on all three types of system: Type 1 - Small appliances, Type 2 - High pressure equipment, and Type 3 - Low pressure and or industrial equipment. Whether you're pulling out refrigerant to fix a leak, cleaning up a system after a burnout or processing a refrigerant to remove non-condensable, you will work with a recover/recycle machine on a daily basis in the HVAC/R career field. First let's review the terms recovery, recycling, and reclaiming. In this lesson, we will not cover steps or detailed information about reclaiming.

1.1. Recovery. To remove refrigerant in any condition from a system and store it in an external container. This may be done without testing or processing the refrigerant in any way.

1.2. Recycling. To clean refrigerant for reuse by oil separation and single or multiple passes through devices such as replaceable core filter driers. These devices reduce moisture, acidity, and matter. This term usually applies to equipment used at the job site or at a local service shop.

1.3. Reclaiming. To return refrigerant to new product, or virgin, factory specifications. This will require chemical analysis of the refrigerant to determine that appropriate product specifications are met. Reprocessing procedures are usually only available at a processing or manufacturing facility. This also includes on-site or local service shops that are equipped with highly technical equipment.

2. Refrigerant Recovery/Recycling Regulatory Requirements. Since July 13, 1993, the evacuation requirements require technicians to evacuate air-conditioning and refrigeration equipment to establish vacuum levels when ***opening*** the equipment.

> **NOTE:**
> Refer to ARI Standard 740-1993 located in Career Development Course (CDC) HVAC/R Journeyman 3E151F, Volume 1, Unit 1, Section 1-2, Lesson 008: *Refrigerant Processing Requirements*. The *Small Appliance Recovery Efficiency Requirements* Table is located on page 1-57, and the *Type II Equipment* table is located on pages 1-59 thru 1-60.

3. Exceptions to Evacuation Requirements. The EPA has established limited exceptions to its evacuation requirements for, (1) Repairs to leaky equipment (2) Repairs that are not *major* and that are not followed by a refrigerant release to the environment.

3.1. If the evacuation levels in Table 3-1 on the next page are not attainable, or would substantially contaminate the refrigerant being recovered, persons opening the appliance must:

3.1.1. Isolate the leak from non-leaking components wherever possible.

3.1.2. Evacuate non-leaking components to the levels in Table 1.

Notice. This AFQTP is *NOT* intended to replace the applicable technical references nor is it intended to replace hands-on training. It is to be used in conjunction with these for training purposes only.

3.1.3. Evacuate leaking components to the lowest level that can be attained without substantially contaminating the refrigerant. This level cannot exceed 0 psig.

TABLE 3-1. REQUIRED LEVELS OF EVACUATION FOR APPLIANCES EXCEPT FOR SMALL APPLIANCES, MOTOR VEHICLE AIR CONDITIONERS (MVAC).

Type of Appliance	Before Nov, 15, 1993	On or after Nov, 15, 1993
HCFC-22 appliance, normally containing less than 200 lbs. of refrigerant.	0 PSI	0 PSI
HCFC-22 appliance, normally containing more than 200 Lbs. of refrigerant.	4 HG (inches of mercury)	10 HG
Other high-pressure appliances, normally containing less than 200 Lbs. of refrigerant (CFC-12, 500, 502, 114).	4 HG	10 HG
Other high-pressure appliances, normally containing more than 200 Lbs. of refrigerant (CFC-12, 500, 502, 114).	4 HG	15 HG
Very high-pressure appliance (CFC-13, 503).	0 PSI	0 PSI
Low-pressure appliance (CFC-11, HCFC-123).	25 HG	25mm HG absolute

3.2. If evacuation of the equipment to the environment is not to be performed when repairs are complete, and if the repair is not ***major***, then the appliance must be:

3.2.1. Evacuated to at least 0 psig before it is opened if it is a high or very high-pressure appliance.

3.2.2. Pressurized to zero psig before it is opened if it is a low-pressure appliance, methods that require subsequent purging (e.g. nitrogen) cannot be used except with appliances containing R-113.

NOTE:
Major repairs are any maintenance, service, or repair that removes any or all of the following components: Compressor, Condenser, Evaporator, or Auxiliary heat exchanger coil.

4. Refrigerant Handling Safety. Because refrigerants are heavier than air, ventilation is important. Fluorocarbons displace air, can cause a person to lose consciousness, and can lead to possible cardiac arrest. If refrigerant contacts the skin, it can cause severe frostbite. In addition, refrigerant can cause blindness. The following items are the minimum safety items required when handling refrigerant:

4.1. Rubber Gloves.

4.2. Safety Glasses and/or Shield.

Notice. This AFQTP is *NOT* intended to replace the applicable technical references nor is it intended to replace hands-on training. It is to be used in conjunction with these for training purposes only.

5. Recovery and Recycle Techniques. Recovery and Recycling equipment comes in various types and designs. Always follow the manufacturer's instruction manual. The following describes the recovery and recycling process and instructions for using this equipment:

5.1. Recovery. Recovery of refrigerants is the least complicated of the methods for processing refrigerants. Recovery is generally used to remove refrigerants from an appliance for a short time while performing repairs, and then the refrigerant is put back in the system. Recovery is also used to remove refrigerants from an appliance to be stored before being turned into a recycle agency that is certified to perform reclaiming services.

5.1.1. The service technician **must never mix different types of refrigerant into the same storage cylinder or single tank,** because it will be impossible to separate the refrigerants during the reclaim process. If by accident refrigerants are mixed, they must be stored in a separate tank that is clearly marked. One of the problems you will face during recovery is low ambient temperature, which will slow the recovery process and dehydration time. This problem can be overcome by heating the appliance with heating pads, controlled hot water, or heat lamps.

5.1.2. To prevent the possibilities of explosions and exposure to toxic fumes, never use an open flame or live steam to heat anything containing refrigerant. During the recovery process, the selected hose should be short in length (3 foot instead of a 6 foot) with a larger diameter (at least equal to the pump intake on the recovery unit) opening. This will prevent excessive pressure drops. Always remember when transferring refrigerant from a recovery unit into a refrigeration appliance, guard against the trapping of liquid refrigerant between service valves.

5.1.3. Recovery equipment will usually come with a recovery cylinder and they may or may not have a built in scale. With a gray bottom and yellow top, these cylinders come in various sizes and are color-coded IAW EPA standards. The refrigerant is removed from the system in its present condition and stored in a disposable or transferable cylinder. Recovery is similar to evacuating a system with a vacuum pump. The unit to be recovered is connected from the low side to the recovery unit suction port (for vapor recovery) or it can be hooked to both the low and high side (for liquid recovery). The recovery unit is run until the pressures from the guidelines in Table 1 (use CDC reference) for the applicable refrigerant and system type are reached. Then the suction valve should be shut off and the system should be left alone for five minutes. If there is a rise in pressure above zero psi, there's still some refrigerant left and you must run the recovery cycle again. The compressor oil from the recovery unit should be changed after every recovery from a compressor burnout and changed before recovery of a different refrigerant. In addition, the drier should be changed and the transfer hoses should be evacuated before transferring a different refrigerant.

NOTE:

Never "jump out " or bypass any safety switches or automatic shut off controls on recovery equipment.

Notice. This AFQTP is *NOT* intended to replace the applicable technical references nor is it intended to replace hands-on training. It is to be used in conjunction with these for training purposes only.

5.2. Recycling. The task of recycling refrigerants is very similar to the recovery process. An extensive filtration system is what ultimately separates the two. With a recycling machine, the technician can fulfill all tasks normally accomplished by a standard recovery machine. With its refrigerant cleaning capabilities, the recycling process is much more desirable than basic recovery method. As the machine removes refrigerant from the system, the gas must pass through a series of filters. Many undesirable substances are removed during this process, to include moisture. Lets look at the recycling equipment.

5.2.1. Recycling equipment connections are usually identical for all machines, but always follow the manufacturers' guidelines. Recycling machines can recover/recycle at the job site or in the shop. Recycling, performed by most machines on the market today, reduces the contaminants in the refrigerant. This is done through oil separation and filtration of acids, moisture, and particles by using replaceable core drier. The refrigerant is cleaned but *not* to the manufacture's original specifications. These machines are classed as single pass (one trip through the system) or multi-pass units (multiple trips through the system). On the multi-pass system, the refrigerant circulates through the machine for a given amount of time or number of cycles then, the refrigerant is returned to the unit or put into a storage cylinder.

5.2.2. Properly operate and maintain the recycling equipment per manufacture guidelines. Most new units have shutoff valves, these operate automatically as the unit is connected and disconnected. Use basic principles of refrigerant flow and heat transfer to aid in the recycling process. Always use appropriate refillable containers. Fill to 80% (maximum) of volume with liquid. Do not use disposable or unapproved containers.

SAFETY:

ALWAYS WEAR NEOPRENE GLOVES AND GOGGLES WHEN CHARGING A REFRIGERANT SYSTEM. REFRIGERANT CAN FREEZE FINGERS AND EYES ON CONTACT CAUSING PERMANENT LOSS OF FUNCTION.

6. Recover and recycle refrigerants from refrigeration and air conditioning systems. With the many types of HVAC/R systems and recovery/recycling machines, it would be impossible to cover steps for each type of equipment. The following steps are a basic guideline for the trainee, trainer, and certifier to accomplish ***vapor*** refrigerant recovery and recycling. If your recovery/recycling unit supports the liquid method, read and follow the instructions that came with the unit. **Refer to the manufacturer's instructions when performing the following steps. In addition, refer to Figure 1 for recovery and Figure 2 for recycling processes.**

Step 1: Observe all safety precautions and don PPE gear (e.g., safety goggles, gloves).

Step 2: Remove the service valve caps and ensure the suction and discharge service valves are in the back-seated position.

Step 3: Remove access port caps and install the manifold gauge assembly. See figures 1 and 2 for guidance.

Step 4: Connect the center hose to the inlet of the recovery/recycle machine.

Step 5: Place applicable service valves in the gauge position.

Step 6: Purge the air from the low side and high side hoses. Purge only the low side for recycling method.

Notice. This AFQTP is *NOT* intended to replace the applicable technical references nor is it intended to replace hands-on training. It is to be used in conjunction with these for training purposes only.

Step 7: Open applicable hand valves on the manifold gauge assembly.

Step 8: Momentarily loosen the center hose at the inlet of the recovery/recycle machine to purge the air.

Step 9: Connect outlet of machine.

9.1. If you are recovering, connect a charging hose from the outlet of the *recovery* unit to the vapor valve on the recovery cylinder (Fig. 1).

9.2. If you are recycling, connect a charging hose from the outlet of the *recycling* unit to an inlet of the HVAC/R high side (Fig. 2)

Step 10: Open the outlet valve on the recovery/recycling unit.

Step 11: Open the inlet valve on the recovery/recycling unit.

Step 12: Turn the recovery/recycling machine on.

Step 13: Momentarily loosen the charging hose at the vapor valve to purge any trapped air.

Step 14: Exporting of refrigerant.

14.1. If you are recovering, open the vapor valve on the *recovery cylinder* (Fig. 3-1) and proceed to Step 15.

14.2. If you are recycling, open the high side valve on the *HVAC/R system* and circulate refrigerant from the low side of the HVAC/R system, through the recycling unit, and back to the high side of the HVAC/R system (Fig. 3-2).

14.2.1. This method of recycling or cleaning the refrigerant is the quickest and easiest way of accomplishing the task. Many of the newer recycling units have enough capacity to hold large amounts of refrigerant and internally cleans the refrigerant. If your unit is a newer and larger type, refer to the manufacturer's operating instruction. Ensure all applicable valves are open (e.g., solenoid, EPR, hand valves, etc…).

14.2.2. While taking periodic moisture and acidity tests, continue recycling the refrigerant through the unit. Once the moisture and/or acidity levels are lowered within acceptable standard, the refrigerant recycling process is ***complete.***

Step 15: When the inlet pressure gauge on the recovery unit reaches 0 psi vapor recovery is complete.

Step 16: Turn the recovery unit off and wait 2 minutes. If pressure rises, continue to recover refrigerant.

Notice. This AFQTP is *NOT* intended to replace the applicable technical references nor is it intended to replace hands-on training. It is to be used in conjunction with these for training purposes only.

Figure 3-1. VAPOR RECOVERY.

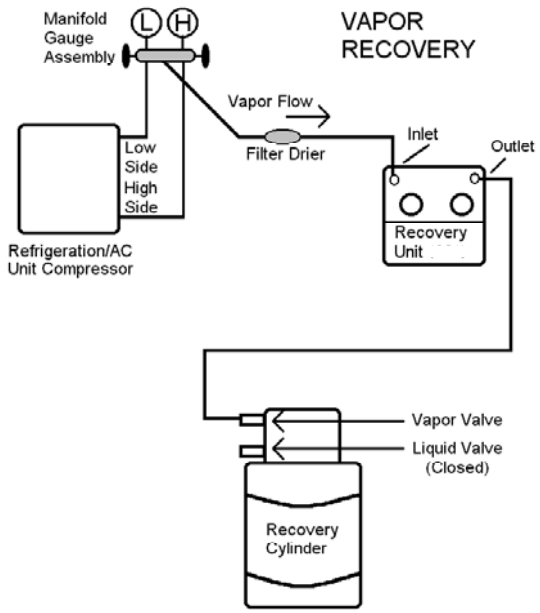

Figure 3-2. VAPOR RECYCLING.

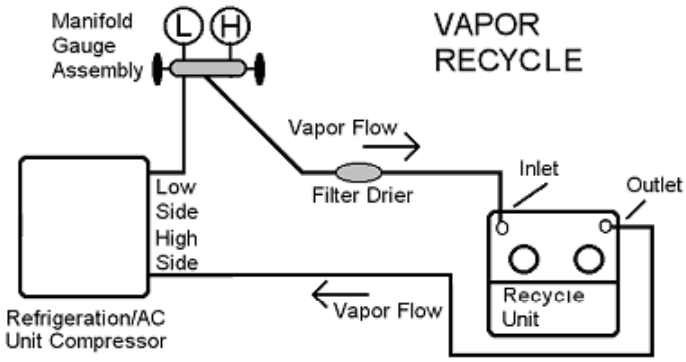

Note: Ensure all applicable valves are open (e.g., Solenoid, EPR, hand valves, etc…).

Notice. This AFQTP is *NOT* intended to replace the applicable technical references nor is it intended to replace hands-on training. It is to be used in conjunction with these for training purposes only.

REVIEW QUESTIONS
FOR
RECOVER AND RECYCLE REFRIGERANTS FROM REFRIGERATION AND AIR CONDITIONING SYSTEMS

QUESTIONS	ANSWERS
1. Recycling refrigerant is the act of bringing the refrigerant to factory specifications.	a. True. b. False.
2. Appliances containing more than 200 pounds of R-22 and manufactured in 1992 must be evacuated to what pressure?	a. 4 hg. b. 10 hg. c. 4 psi d. 10 psi.
3. High-pressure appliances containing less than 200 pounds of R-502 and manufactured in 1996 must be evacuated to what pressure?	a. 4 hg. b. 10 hg. c. 4 psi d. 10 psi.
4. All HVAC/R personnel in the Air Force will be certified as a _____.	a. Type 1 technician. b. Type 2 technician. c. Type 3 technician. d. Universal technician.

Notice. This AFQTP is *NOT* intended to replace the applicable technical references nor is it intended to replace hands-on training. It is to be used in conjunction with these for training purposes only.

RECOVER AND RECYCLE REFRIGERANTS FROM REFRIGERATION AND AIR CONDITIONING SYSTEMS

PERFORMANCE CHECKLIST

INSTRUCTIONS:

The trainee must satisfactorily perform all parts of the task without assistance. Evaluate the trainee's performance using this checklist.

DID THE TRAINEE….	YES	NO
1. follow all safety guidelines?		
2. properly disconnect HVAC/R system by locking and tagging out appliance?		
3. properly connect manifold gauge assembly (MGA)?		
4. properly connect recovery/recycle machine to HVAC/R system?		
5. properly connect recovery/recycle machine to recovery cylinder?		
6. use the right unit & cylinder for the system refrigerant?		
7. bleed air from all hoses?		
8. properly recovery refrigerants from system?		
9. properly recycle refrigerants from system?		
10. properly check refrigerant for moisture and acidity content?		
11. pull appliance down to 0 psig and maintained it?		
12. re-start unit as necessary?		
13. require NO assistance from trainer/certifier?		
14. clean up work area?		
15. finish product has a professional appearance?		

FEEDBACK: Trainer/Certifier should provide both positive and/or negative feedback to the trainee immediately after the task is performed. This will ensure the issue is still fresh in the mind of both the trainee and trainer/certifier.

Notice. This AFQTP is *NOT* intended to replace the applicable technical references nor is it intended to replace hands-on training. It is to be used in conjunction with these for training purposes only.

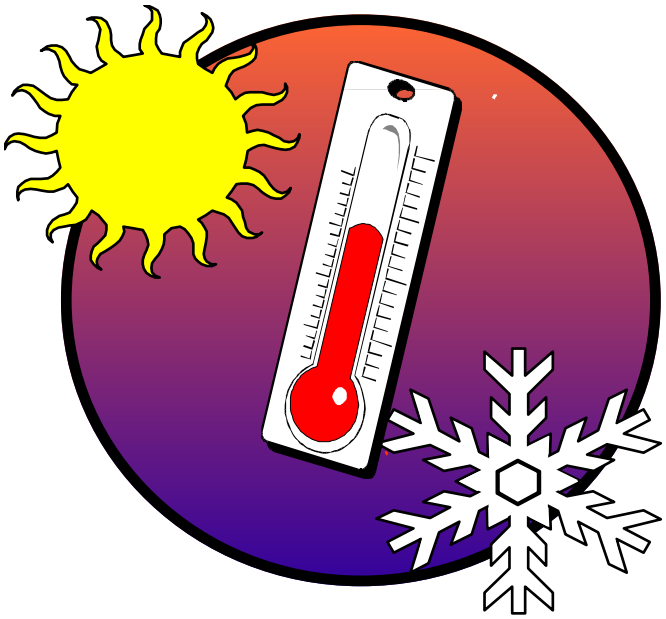

PROCESS REFRIGERANTS IAW EPA AND AIR FORCE STANDARDS

MODULE 21 AFQTP UNIT 3

PUMP DOWN REFRIGERATION SYSTEMS (21.3.4.)

Notice. This AFQTP is *NOT* intended to replace the applicable technical references nor is it intended to replace hands-on training. It is to be used in conjunction with these for training purposes only.

PUMP DOWN REFRIGERATION SYSTEMS

Task Training Guide

STS Reference Number/Title:	21.3.4. - Pump down refrigeration systems.
Training References:	1. Modern Refrigeration and Air Conditioning, 1996, Chapter 13, Section 13-4, Page 511: *Electric Heater Defrost System.* 2. Career Development Course (CDC) HVAC/R Journeyman 3E151F, Volume 1, Unit 1, Section 1-4, Lesson 011: Types of Refrigeration and Air-conditioning Controls. (Note: The CDC Writer at Sheppard AFB is developing the supplement for this topic.)
Prerequisites:	1. **Possess a minimum of a 3E131 AFSC.** 2. **Possess a Universal Refrigerant Handling Card.** 3. **Review the following references:** 3.1. Modern Refrigeration and Air Conditioning, 1996, Chapter 13, Section 13-4, Page 511. 3.2. CDC HVAC/R Journeyman 3E151F, Volume1, Unit 1, Section 1-4, Lesson 011.
Equipment/Tools Required:	1. Personnel Protection Equipment (PPE). 2. HVAC/R tool bag. 3. Manifold gauge assembly (MGA).
Learning Objective:	Trainee should understand the purpose for and know the methods of pumping down a refrigerant system.
Samples of Behavior:	Trainee will demonstrate knowledge of how to pump down a system.
Notes:	
Any safety violation is an automatic failure.	

Notice. This AFQTP is *NOT* intended to replace the applicable technical references nor is it intended to replace hands-on training. It is to be used in conjunction with these for training purposes only.

PUMP DOWN REFRIGERATION SYSTEMS

1. Background. Pumping down a system is defined as the act of using the compressor to move and store the refrigerant to the receiver or condenser. For any service work requiring access to the compressor or the sealed part of the system, the refrigerant must first be removed. On any system with a receiver, the refrigerant can be pumped into the condenser and receiver and isolated there. Pump down is also used as a means of isolating the refrigerant and preventing migration to the compressor crankcase during periods of shipment, storage, or non-operating off cycles. On small systems without service valves or pump down control, it may be necessary to remove the refrigerant charge prior to servicing the equipment, and then recharge the system when put back in service.

SAFETY:

MAKE CERTAIN THAT LIQUID REFRIGERANT IS NOT TRAPPED IN THAT PART OF THE SYSTEM BEING OPENED. GOGGLES SHOULD BE WORN WHEN WORKING WITH REFRIGERANTS. NUMEROUS ACCIDENTS RESULTING IN BLINDNESS AND OTHER SERIOUS INJURIES RESULTED FROM TECHNICIANS NOT WEARING GOGGLES.

SAFETY:

DO NOT PUT A FLAME ON A SYSTEM CONTAINING REFRIGERANT. THIS WILL CAUSE R-12, R-22 AND OTHER HCFC AND CFC REFRIGERANTS TO DECOMPOSE AND FORM HYDROCHLORIC, HYDROFLUORIC ACIDS, AS WELL AS PHOSGENE GAS, WHICH IS POISONOUS TO INHALE.

2. Method. The pump down procedure is accomplished by closing the valve at the outlet of the receiver or condenser while the compressor is operating. Since no further refrigerant can flow to the evaporator, the refrigerant is pumped out of the evaporator and into the condenser. Check the operating pressures by means of a manifold gauge and when the suction pressure reaches 1 to 5 psig (pounds per square inch gage), stop the compressor.

NOTE:

If the unit is equipped with a low-pressure control having a higher setting, the control must be **temporarily** bypass to successfully pump down the system.

If access to the discharge line, condenser, or receiver is needed, pumping the system down is of no benefit. The refrigerant charge must be removed unless there are valves to isolate the defective component.

2.1. Observe the manifold gauge assembly (MGA), if the pressure rises rapidly, then more than likely there is still residual refrigerant boiling off in the system. Start the compressor and again pump the suction pressure down to 1 to 5 psig. This may need to be repeated several times. In the event the pressure should drop into a vacuum and remain there for several minutes, disconnect power from the compressor, and crack open the receiver valve briefly to introduce sufficient refrigerant to obtain a slight positive pressure (1 to 5 psig).

Notice. This AFQTP is *NOT* intended to replace the applicable technical references nor is it intended to replace hands-on training. It is to be used in conjunction with these for training purposes only.

2.2. The liquid line, the low-pressure side of the system, and the compressor should now be at a slight positive pressure (Approximately 1 to 5 psig). Use the proper tools to remove any positive pressure that remains in the system. You now can remove and replace the component in question or correct the malfunction, (i.e., fix the leak).

CAUTION:

NEVER OPERATE A COMPRESSOR WHEN IN A VACUUM. THIS CAN CAUSE THE COMPRESSOR TERMINALS TO FAIL DUE TO INTERNAL ARCING WHICH IN TURN; CAN RESULT IN SEVERE PERSONAL INJURY.

DO NOT ATTEMPT TO STOP AN OPERATING SYSTEM BY OPENING THE DISCONNECT SWITCH. HIGH INTENSITY ARCHING CAN OCCUR AND CAUSE SERIOUS INJURY. FIRST USE CONTROL CIRCUIT DEVICE(S) TO STOP THE SYSTEM, FOLLOWED BY DISENGAGING THE DISCONNECT SWITCH OR CIRCUIT BREAKER.

3. Procedures. Follow these steps to pump down a refrigeration system:

Step 1: Don appropriate safety equipment.

Step 2: Attach MGA.

Step 3: Gage the suction and discharge service ports.

Step 4: Purge hoses.

Step 5: Operate appliance.

Step 6: Manually close king valve or liquid line service valve.

Step 7: Observe unit.

Step 8: Turn off unit when low side pressure is between 1and 5 psig.

Step 9: Observe gages.

Step 10: If pressure rises back up, restart unit until 1-5 psig is maintained.

Step 11: Once pressure range is maintained, unit is pump down.

Step 12: Back seat service valves and remove gauges.

Notice. This AFQTP is *NOT* intended to replace the applicable technical references nor is it intended to replace hands-on training. It is to be used in conjunction with these for training purposes only.

REVIEW QUESTIONS
FOR
PUMP DOWN REFRIGERATION SYSTEMS

QUESTION	ANSWER
1. The act of *using the compressor* to move and store the refrigerant in the receiver or condenser is defined as pump down.	a. True. b. False.
2. At what pressure is the compressor stopped?	a. 1-5 PSIG. b. 2-6 PSIG. c. 7-9 PSIG. d. 10-11 PSIG.
3. For any service work requiring access to the compressor or the sealed part of the system, the refrigerant must first be removed.	a. True. b. False.
4. The pump down procedure is accomplished by closing the valve at the outlet of the receiver or condenser while the _____ is operating.	a. compressor b. condenser c. receiver d. evaporator
5. If it is necessary to remove or gain access to the discharge line, condenser, or receiver, pumping the system down is of no benefit, and the refrigerant charge must be removed unless there are valves to isolate the defective component.	a. True. b. False.

Notice. This AFQTP is *NOT* intended to replace the applicable technical references nor is it intended to replace hands-on training. It is to be used in conjunction with these for training purposes only.

PUMP DOWN REFRIGERATION SYSTEM

PERFORMANCE CHECKLIST

INSTRUCTIONS:

The trainee must satisfactorily perform all parts of the task without assistance. Evaluate the trainee's performance using this checklist.

DID THE TRAINEE….	YES	NO
1. remove his/her jewelry?		
2. don personnel protection equipment (PPE)?		
3. shut off system (if applicable)?		
4. connect manifold gauge assembly (MGA) correctly?		
5. connect both sides of the system to manifold assembly?		
6. crack high-side MGA hand valve momentarily?		
7. bleed air from center hose?		
8. close king valve or pump down control?		
9. back seat discharge service valve?		
10. ensure suction service valve is gauged?		
11. start compressor?		
12. stop compressor when 1 - 5 psig was achieved?		
13. monitor - repeat 10 and 11 if necessary to maintain 1-5 psig?		
14. back seat suction service valve?		
15. remove gauges?		
16. clean up work area?		

FEEDBACK: Trainer/Certifier should provide both positive and/or negative feedback to the trainee immediately after the task is performed. This will ensure the issue is still fresh in the mind of both the trainee and trainer/certifier.

Notice. This AFQTP is *NOT* intended to replace the applicable technical references nor is it intended to replace hands-on training. It is to be used in conjunction with these for training purposes only.

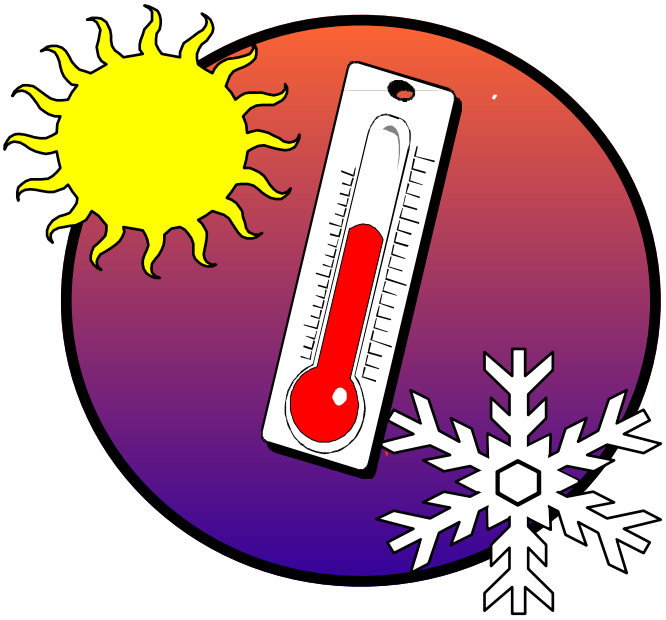

PROCESS REFRIGERANTS IAW EPA AND AIR FORCE STANDARDS

MODULE 21 AFQTP UNIT 3

PRESSURE CHECK REFRIGERATION SYSTEMS (21.3.5.)

Notice. This AFQTP is *NOT* intended to replace the applicable technical references nor is it intended to replace hands-on training. It is to be used in conjunction with these for training purposes only.

PRESSURE CHECK REFRIGERATION SYSTEMS

Task Training Guide

STS Reference Number/Title:	21.3.5. - Pressure check refrigeration systems.
Training References:	1. Modern Refrigeration and Air Conditioning, 1996, Chapter 1: *Fundamentals of Refrigerant* - Pages 37-39 & 46-47. 2. Career Development Course (CDC) HVAC/R Journeyman 3E151F, Volume 1, Unit 1, Section 1-1, Lesson 001: *Basic Refrigeration Cycle*.
Prerequisites:	1. **Possess a minimum of a 3E131 AFSC.** 2. **Review the following reference:** 2.1. Modern Refrigeration and Air Conditioning, 1996, Chapter 1, Pages 37-39 and 46-47. 2.2. CDC HVAC/R Journeyman 3E151F, Volume 1, Unit 1, Section 1-1, Lesson 001, Pages 1-5 & 1-6.
Equipment/Tools Required:	1. Personnel protective equipment (PPE). 2. HVAC/R tool bag. 3. Manifold gauge assembly (MGA).
Learning Objective:	Trainee should understand the purpose for and know the methods of checking system pressure.
Samples of Behavior:	Trainee will know how to check system pressure.
Notes:	
Any safety violation is an automatic failure.	

Notice. This AFQTP is *NOT* intended to replace the applicable technical references nor is it intended to replace hands-on training. It is to be used in conjunction with these for training purposes only.

PRESSURE CHECK REFRIGERATION SYSTEMS

1. Background. Frequently a technician may need to determine if a refrigeration system is functioning normally. That is, he/she may need to know if a system actually has a trouble or not. C*onnecting a manifold gauge set to the suction and discharge lines will provide valuable information to technicians*. It is then possible to determine if the suction and discharge pressures are within the normal operating range for a particular unit. All operating conditions must be considered when pressure checking the system (e.g., outdoor ambient temperature, evaporator heat load etc.)

2. Manifold Gauge Assembly (MGA).

2.1. Manifold. The manifold has three ports to connect service hoses. The port on each end of the manifold is used to take readings of the high and low side of a system while the center port is used for recovery, charging and evacuation of a system.

2.2. Gauges. The MGA (manifold gauge assembly) or set consists of two pressure gauges. These pressure gauges are calibrated for refrigeration use and service technicians use them as their primary tool for checking system pressure. Gauges for the high-pressure side of the system have scales reading from zero psig to 500 psig (pounds per square inch gage). Gauges for the low-pressure part of the system are termed compound gauges, since the scale is graduated for pressures above atmospheric pressure in psig, and for pressures below atmospheric pressure in vacuum in inches of mercury. The compound gauge is calibrated from 30 inches of vacuum to up 150 psig.

2.3. Generally, the high side gauge will be color-coded red, while the low side gauge will be color-coded blue. The low side gauge will have increments of PSIG for pressures above O-PSIG and inches of mercury (HG) for measuring vacuum. The high side gauge will have increments from 0 to 500 PSI. Although some high side gauges will show a vacuum scale, it is not used to measure vacuum. This part of the gauge is only there to protect the pointer from being thrown out of calibration if the gauge is exposed to vacuum pressures. In addition to the pressure scales, equivalent saturation temperatures for commonly used refrigerants are usually shown on the gauge dial.

CAUTION:

DO NOT USE THE LOW SIDE GAUGE AS THE SOLE SOURCE OF VACUUM MEASUREMENT WHEN USED WITH A VACUUM PUMP. A MICRON OR ANOTHER TYPE OF TRUE VACUUM MEASURING DEVICE MUST BE USE.

3. Care and Use of the Manifold Gauge Assembly.

3.1. Never drop or abuse the gauge manifold.

3.2. Keep ports or charging lines capped when not in use.

3.3. Never use with any fluid other than refrigerant oil, refrigerant, and inert gas (nitrogen).

3.4. Regularly check gauges for calibration and adjust if needed.

3.5. Never subject gauges to pressures higher or lower than gauges face scale ranges

3.6. Ensure hoses are stamped with high-pressure ratings

3.7. Prevent hoses from being chafed, crushed or stretched.

Notice. This AFQTP is *NOT* intended to replace the applicable technical references nor is it intended to replace hands-on training. It is to be used in conjunction with these for training purposes only.

4. Procedures. Follow these steps to pressure check a refrigeration system:

SAFETY:
REMOVE JEWELRY DON SAFETY GOGGLES AND NEOPRENE GLOVES.

4.1. Install Manifold Gauge Assembly (MGA):

Step 1: Observe listed safety precautions.

Step 2: Remove service valve stem caps.

Step 3: Back seat service valves.

Step 4: Remove dust covers on service ports.

Step 5: Connect MGA hoses to service ports.

Step 6: Gauge service valves.

Step.7: Bleed hoses.

Step 8: Observe pressures on both low and high side gauges.

4.2. Remove Manifold Gauge Assembly (MGA):

Step 1: Back seat discharge service valve.

Step 2: Back seat suction service valve.

Step 3: Remove MGA hoses.

Step 4: Verify service ports are not leaking.

Step 5: Install dust covers on service ports.

Step 6: Install service valve stem caps.

Notice. This AFQTP is *NOT* intended to replace the applicable technical references nor is it intended to replace hands-on training. It is to be used in conjunction with these for training purposes only.

REVIEW QUESTIONS
FOR
PRESSURE CHECK REFRIGERATION SYSTEMS

QUESTION	ANSWER
1. The manifold has three ports to connect service hoses.	a. True. b. False.
2. What pressure gauge indicates pressure both above and below atmospheric pressure?	a. Compound gauge. b. Valve stem gauge. c. Dust cover gauge. d. Manifold gauge.
3. What color is the low side gauge?	a. Purple. b. Red. c. Blue. d. Orange.
4. What color is the high side gauge?	a. Red. b. Blue. c. Purple. d. White.
5. The high side pressure gauge scale ranges from _____ to _____.	a. 0 – 300psig. b. 0 – 250psig. c. 0 – 400psig. d. 0 – 500psig.
6. What are the two measurement listed on the manifold gauges scale?	a. Pressure and vacuum. b. Vacuum and saturation temperature. c. Superheat and pressure. d. Pressure and saturation temperature.
7. The three fluid used with the manifold gauges are refrigerant oil, refrigerant and inert gas.	a. False. b. True.

Notice. This AFQTP is *NOT* intended to replace the applicable technical references nor is it intended to replace hands-on training. It is to be used in conjunction with these for training purposes only.

PRESSURE CHECK REFRIGERATION SYSTEMS

PERFORMANCE CHECKLIST

INSTRUCTIONS:

The trainee must satisfactorily perform all parts of the task without assistance. Evaluate the trainee's performance using this checklist.

DID THE TRAINEE….	YES	NO
1. remove his/her jewelry?		
2. don safety goggles and leather gloves?		
3. install manifold gauge assembly (MGA) by:		
3.1. observing safety precautions?		
3.2. removing service valve stem caps?		
3.3. backing seat service valves?		
3.4. removing dust covers on service ports?		
3.5. connect MGA hoses to service ports?		
3.6. gauging service valves?		
3.7. bleeding hoses?		
4. remove manifold gauge assembly (MGA) by:		
4.1. backing seat discharge service valve?		
4.2. backing seat suction service valve?		
4.3. removing MGA hoses?		
4.4. installing dust covers on service ports?		
4.5. installing service valve stem caps?		

FEEDBACK: Trainer/Certifier should provide both positive and/or negative feedback to the trainee immediately after the task is performed. This will ensure the issue is still fresh in the mind of both the trainee and trainer/certifier.

Notice. This AFQTP is *NOT* intended to replace the applicable technical references nor is it intended to replace hands-on training. It is to be used in conjunction with these for training purposes only.

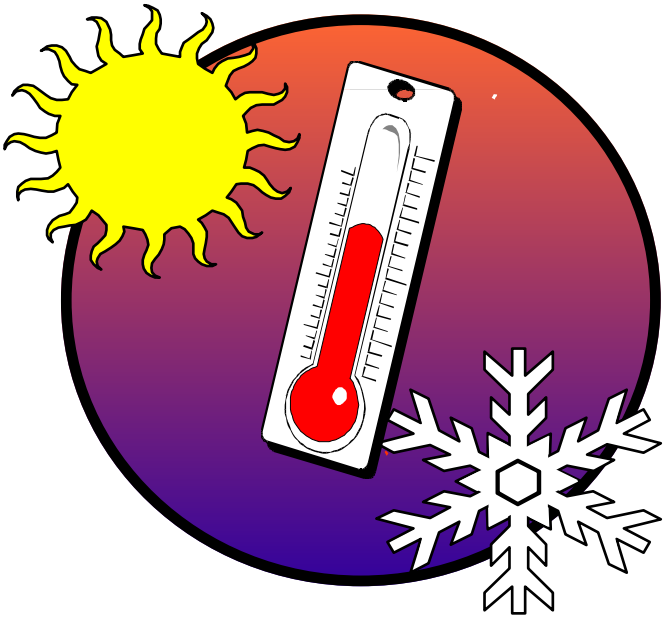

PROCESS REFRIGERANTS IAW EPA AND AIR FORCE STANDARDS

MODULE 21 AFQTP UNIT 3

CHARGE HVAC/R SYSTEMS WITH REFRIGERANT (21.3.6.)

Notice. This AFQTP is *NOT* intended to replace the applicable technical references nor is it intended to replace hands-on training. It is to be used in conjunction with these for training purposes only.

CHARGE HVAC/R SYSTEMS WITH REFRIGERANT

Task Training Guide

STS Reference Number/Title:	21.3.6. - Charge HVAC/R systems with refrigerant.
Training References:	1. Modern Refrigeration and Air Conditioning, 1996, Chapter 9, Sections 9-17 & 9-18: *Charging/Identifying Refrigerants, Amount of Refrigerant Required in a System*. 2. Trane Air Conditioning Manual, 1983, Chapter VI, Pages 185 & 186: *Refrigerant Charge, Weight of Refrigerant Required, Storage Capacity*. 3. Career Development Course (CDC) HVAC/R Journeyman 3E151F, Volume 1, Unit 1, Section 1-3, Lesson 010: *Retrofitting Procedures.*
Prerequisites:	1. **Possess a minimum of a 3E131 AFSC.** 2. **Review the following references:** 2.1. AFQTP 3E1X1-21 Unit 5, 21.5.3.9. - Calculate and Adjust Superheat and 21.5.3.10. - Calculate Subcooling. 2.2. Modern Refrigeration and Air Conditioning, Chapter 9, Sections 9-17 & 9-18. 2.3. Trane Air Conditioning Manual, 1983, Chapter VI, Pages 185 & 186. 2.4. CDC HVAC/R 3E151F, Volume 1, Unit 1, Section 1-3, Lesson 010.
Equipment/Tools Required:	1. Personnel protective equipment (PPE). 2. HVAC/R tool bag. 3. Manifold gauge assembly (MGA).
Learning Objective:	Without assistance, the trainee will charge a refrigerant system.
Samples of Behavior:	Trainee will know how to charge a refrigerant system.
Notes:	
Any safety violation is an automatic failure.	

Notice. This AFQTP is *NOT* intended to replace the applicable technical references nor is it intended to replace hands-on training. It is to be used in conjunction with these for training purposes only.

CHARGE HVAC/R SYSTEMS WITH REFRIGERANT

1. Background. Charging methods vary with equipment types and manufactures. The method used also depends on the operating condition of the system and the availability of charging points in the low and high-pressure sides of the system. Regardless of system size, accurate refrigerant charge is vital to optimum system operations. This lesson will highlight the most commonly used charging methods.

2. Charging Methods.

2.1. Weight Charging. This is the most accurate charging procedure. Charging by weight is used if a **complete charge** must be added to the system and the designed weight of the charge is known. To find the type and weight of refrigerant, check equipment nameplate or manufacture's service literature. The weight method of charging can be employed on partially charge systems. (However, the refrigerant must be recovered then recharged with the exact amount).

> **NOTE:**
> Charging by weight is the only method that can be used to charge heat pump units in the heating mode.

2.2. Subcool Charging. Subcool method can be used to check and adjust the charge in an operating system with Thermostatic Expansion Valves (TEVs) or similar devices. Charging TEVs (or similar devices) systems by superheat should not be use. Because TEV maintains a constant degree of superheat over wide range of load conditions, superheat charging will not yield the desire results. Conversely, subcool charging will provide an accurate charge for these systems (if amount of system charge is unknown). This method measures the liquid line refrigerant temperature to determine if the metering device is receiving the correct quality liquid. If the temperature is incorrect, adjusting the amount of system refrigerant will changed the temperature.

2.3. Charging by Superheat. This method can be use to check and adjust the charge in an operating system. However, it is ONLY use for systems with a fixed-orifice metering device such as a capillary tube or metering piston. The superheat method takes into consideration the operating conditions of the system and establishes a required superheat. By adjusting the system refrigerant charge, the required suction line superheat temperature is reached. Superheat may vary in different parts of the country/world, due to a difference in ambient temperature. Hotter climates generally require a lower superheat. For the correct system charge when using superheat, consult manufacture's service literature.

> **NOTE:**
> Proper superheat is important for two reasons:
> 1. To ensures that the refrigerant entering the compressor contains no liquid.
> 2. To have the refrigerant in the evaporator absorb the maximum heat load.

Notice. This AFQTP is *NOT* intended to replace the applicable technical references nor is it intended to replace hands-on training. It is to be used in conjunction with these for training purposes only.

SAFETY:

ALWAYS WEAR NEOPRENE GLOVES AND GOGGLES WHEN CHARGING A REFRIGERANT SYSTEM. REFRIGERANT CAN FREEZE FINGERS AND EYES ON CONTACT CAUSING PERMANENT LOSS OF FUNCTION.

3. Refrigerant Charging Conditions. Charging refrigerant into the system is accomplished by injecting refrigerant in the vapor or liquid state. The option used is system dependent.

3.1. Vapor-state. Primarily small residential to light-commercial systems are vapor charged through the gauge port of the compressor suction service valve. Due to their chemical compositions, this method *cannot* be used when charging with 400 series refrigerants. To correctly use vapor procedure, the system must be operating.

3.2. Liquid-state: Charging refrigerant in the liquid state is used for larger systems. The liquid in many cases is charged through the **opened liquid-line** service valve while the compressor is **not** in operation. If a complete charge is needed in a large evacuated system, liquid charging will prove to be most advantageous. Under most conditions, the entire charge will flow into the system in the liquid state. However, if the liquid flows slowly to a trickle or stops before charging is completed, close the liquid service valve and finish by suction vapor (the liquid reached a stagnate point and the compressor must be operated to displace the liquid).

4. Procedures. Follow these steps to charge a HVAC/R system with refrigerant:

Step 1: Obtain refrigerant quantity, type, superheat or subcool from nameplate or manufacture's literature.

Step 2: Don personal protective equipment (PPE):

2.1. Neoprene gloves.

2.2. Goggles.

Step 3: Back seat the suction-line service valve. If you are using a system with line piercing valves (Schrader valve), connect the suction/discharge hoses and proceed to **Step 9.**

Step 4: Connect the line from the low side of the manifold gauge assembly (MGA) to the suction-line service valve gauge port.

Step 5: Gauge the suction service valve and briefly open the low-side valve of the gauge manifold.

Step 6: Back seat discharge service valve.

Step 7: Connect the line from the high side of the MGA to the discharge service valve gauge port.

Step 8: Gauge the discharge service valve and briefly open the high-side valve of the manifold gauge.

Step 9: Connect the center hose from the manifold to the refrigerant cylinder.

Step 10: Keep cylinder upright (or connect hose to vapor valve on recovery cylinder), briefly open cylinder valve and use the vapors to purge lines, manifold gauge assembly, and hoses.

Notice. This AFQTP is *NOT* intended to replace the applicable technical references nor is it intended to replace hands-on training. It is to be used in conjunction with these for training purposes only.

Step 11: Fully open the refrigerant cylinder valve and charge the system using one or more of the charging methods previously covered.

Step 12: Start the compressor and wait until the head pressure and the suction pressure stabilize.

12.1. If the system is built with a low-pressure control, temporary bypass maybe necessary to avert compressor short cycling during charging.

12.2. Fully open the cylinder valve and control refrigerant flow by the service -gauge manifold low-side valve. Periodically close the cylinder valve and check the suction pressure to observe if required pressure is reached.

12.3. Also, periodically check the head pressure to make sure that it does not exceed safe operating condition. .

12.4. Place cylinder in a bucket of **warm** water (80° to 110° F.) or use a cylinder heater blanket if cylinder pressure drops too low during charging

SAFETY:

DO NOT APPLY HEAT WITH A TORCH. THIS MAY CAUSE THE DRUM TO EXPLODE. NEVER HEAT THE CYLINDER OVER 125 DEGREES F.

Step 13: When the proper amount of refrigerant is introduced into the system, close the cylinder valve and the low-side valve on the gauge manifold, and then disconnect the charging line.

Step 14: When the system is operating as specified by the manufacturer, you must:

14.1. Back seat the suction-line and discharge service valves and bleeds pressure from both gauge lines through the gage manifold charging port.

14.2. Disconnect the gauge lines from the suction-line and discharge service valves.

Step 15: Replace the refrigerant cylinder cap or cylinder valve cover, and place flare plugs in the open ends of the charging and gauge lines.

Step 16: Replace the caps on the gauge ports of the service valves.

Notice. This AFQTP is *NOT* intended to replace the applicable technical references nor is it intended to replace hands-on training. It is to be used in conjunction with these for training purposes only.

REVIEW QUESTIONS
FOR
CHARGE HVAC/R SYSTEMS WITH REFRIGERANT

QUESTION	ANSWER
1. What is the most accurate refrigerant charging procedure?	a. Weight. b. Ambient. c. Superheat. d. Sight glass.
2. A liquid line sight glass will show bubbles if the system _____.	a. has vapor in the liquid line. b. has liquid in the liquid line c. is properly charged. d. All of the above.
3. When charging a system using a 400 series refrigerant, you must use the vapor charging method.	a. True. b. False.
4. Refrigerant is charge into the system in these two states: _____ and _____.	a. vapor / liquid. b. ambient / refrigerant. c. gauge / cylinder. d. natural / forced.
5. What is the charging method to use when a heat pump is operating in the heat mode?	a. Temperature. b. Subcool. c. Weight. d. Superheat.
6. What are the two methods of charging a system that employs a TEV?	a. Superheat and liquid. b. Liquid and pressure. c. Pressure and weight. d. Weight and subcool.
7. A fix orifice system should be charge with the weight or superheat method.	a. True. b. False.

Notice. This AFQTP is *NOT* intended to replace the applicable technical references nor is it intended to replace hands-on training. It is to be used in conjunction with these for training purposes only.

CHARGE HVAC/R SYSTEMS WITH REFRIGERANT

PERFORMANCE CHECKLIST

INSTRUCTIONS:

The trainee must satisfactorily perform all parts of the task without assistance. Evaluate the trainee's performance using this checklist.

DID THE TRAINEE….	YES	NO
1. remove his/her jewelry?		
2. don their safety equipment?		
3. install MGA correctly?		
4. connect center hose of MGA to refrigerant cylinder?		
5. open refrigerant cylinder valve $^{1}/_{4}$ turn?		
6. momentarily loosen center hose at MGA?		
7. charge system by:		
7.1. opening low side MGA hand valve?		
7.2. turning on unit?		
7.3. using one of the following methods (trainee choice):		
7.3.1. superheat?		
7.3.2. weight?		
7.3.3. subcool?		
8. close low side MGA hand valve?		
9. disconnect cylinder from system by:		
9.1. closing refrigerant cylinder valve?		
9.2. removing MGA center hose from cylinder?		
9.3. cleaning and removing MGA?		

FEEDBACK: Trainer/Certifier should provide both positive and/or negative feedback to the trainee immediately after the task is performed. This will ensure the issue is still fresh in the mind of both the trainee and trainer/certifier.

Notice. This AFQTP is *NOT* intended to replace the applicable technical references nor is it intended to replace hands-on training. It is to be used in conjunction with these for training purposes only.

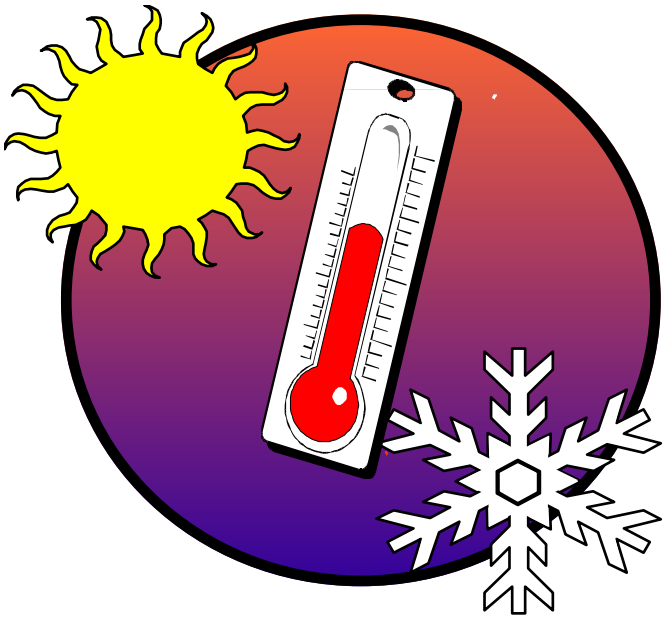

AIR CONDITIONING SYSTEMS

MODULE 21 AFQTP UNIT 5

PLOT PRESSURE ENTHALPY CHART FOR REFRIGERATION CYCLE (21.5.3.7.)

Notice. This AFQTP is *NOT* intended to replace the applicable technical references nor is it intended to replace hands-on training. It is to be used in conjunction with these for training purposes only.

PLOT PRESSURE ENTHALPY CHART FOR REFRIGERATION CYCLE

Task Training Guide

STS Reference Number/Title:	21.5.3.7. - Plot pressure enthalpy chart for refrigeration cycle.
Training References:	1. Modern Refrigeration and Air Conditioning, 1996, Chapter 9: *Refrigerants*. 2. Trane Air Conditioning Manual. 3. Career Development Course (CDC) HVAC/R Journeyman 3E151F, Volume 1, Unit 2, Section 2-1: *Pressure-Enthalpy Chart*.
Prerequisites:	1. **Possess a minimum of a 3E151 AFSC.** 2. **Review the following references:** 2.1. Modern Refrigeration and Air Conditioning, Chapter 9. 2.2. CDC HVAC/R Journeyman 3E151F, Volume 1, Unit 2, Section 2-1.
Equipment/Tools Required:	1. Working Refrigeration or A/C system. 2. Thermometer. 3. Manifold Gage Assembly. 4. Valve wrench. 5. 2 blank PE charts. 6. Paper. 7. Pencil. 8. Straight Edge.
Learning Objective:	Given equipment, trainee will plot pressure enthalpy chart for refrigeration cycle.
Samples of Behavior:	Trainee will demonstrate how to plot enthalpy chart for refrigeration cycle and draw conclusions on system operating efficiency.
Notes:	
Any safety violation is an automatic failure.	

Notice. This AFQTP is *NOT* intended to replace the applicable technical references nor is it intended to replace hands-on training. It is to be used in conjunction with these for training purposes only.

PLOT PRESSURE ENTHALPY CHART FOR REFRIGERATION CYCLE

1. Background. System efficiency is something talked about in shops, but does anyone really know how to tell if a system is operating efficiently? They do if they understand the pressure enthalpy (PE) chart and how it can help them "see" the heat processes that occur inside the system. After completing this module, you too will be able to plot these processes and more importantly draw conclusions based on them.

2. Additional Information. Enthalpy is a measure of how much heat a vapor or liquid can hold. It is not measurable directly, but must be plotted using values that are measurable. As such it is a derivative product, but one that supply a great amount of information. Your CDC described in great detail the measurements and how they are plotted, we are going to list the steps next.

3. Procedures. Follow these steps to plot a pressure enthalpy chart for refrigeration cycle:

Step 1: Measure discharge pressure and record on paper.

Step 2: Measure suction pressure and record.

> **NOTE:**
> Remember that you need to insulate the thermal bulb of your thermometer so that the ambient condition does not skew your readings.

Step 3: Measure the Temperature at the thermal valve bulb of the Expansion valve (Evaporator Outlet).

Step 4: Measure the temperature at the inlet of the compressor (suction inlet).

Step 5: Measure the temperature at the compressor outlet (discharge outlet).

Step 6: Measure the temperature at the condenser outlet.

Step 7: Measure the temperature at the expansion valve inlet.

Step 8: Take out your PE Chart.

Step 9: Convert your pressures from psig to psia (add 14.7).

Step 10: Follow the pressure scale on the left up until you find your pressures and draw horizontal lines with your straight edge.

Step 11: The curved lines are temperature lines. Find the line that corresponds to the compressor discharge temp and follow it down until it intersects with your high pressure discharge line place an X at that point.

Step 12: Find the line that corresponds to the compressor inlet temperature and follow it down until it reaches the suction pressure line, place an X at that point.

Step 13: Take your straight edge and draw a line that connects the two X's.

Step 14: Take your condenser outlet temperature and plot that on the high-pressure line.

Step 15: Plot your thermal bulb temperature on the Low-pressure line.

Notice. This AFQTP is *NOT* intended to replace the applicable technical references nor is it intended to replace hands-on training. It is to be used in conjunction with these for training purposes only.

Step 16: Plot valve inlet temperature on the High-pressure line.

Step 17: Take your straight edge and draw a line straight down from the inlet temperature to the low-pressure line.

4. Analyze the Pressure Enthalpy Chart. You have before you now a completed refrigeration cycle plotted on a pressure enthalpy chart. But what does it mean? What do you do with it now? Now comes the fun stuff.

4.1. The vertical line you drew on from the high-pressure line to the low-pressure line crosses a bold black curved line. The point where it crosses this "saturation line" is the point where the refrigerant leaves the metering device and enters the evaporator. If you take your pencil and straight edge and continue this line down to the bottom then do the same with the thermal bulb point you can see at the bottom the amount of heat that was absorbed by the evaporator.

4.2. If you drop another line from the compressor inlet, you can see how much heat was absorbed from the tubing on the way to the compressor.

4.3. Next drop a line from the compressor outlet down and the difference between it and the compressor inlet line is the heat added through compression.

4.4. The condenser inlet and outlet lines are drawn vertically to the BTU scale at the top of the diagram and it is there that you can see how much heat the condenser dissipated. The area of the high-pressure line after the curved saturation line on the left is the amount of sub cooling that was accomplished.

4.5. Basically anything to the left of the bold curved line is liquid anything to the right of it is vapor, anything in the middle describes the amount of heat required to take the refrigerant from liquid to vapor and vice versa.

5. The Big Picture. By taking the *data* and the *plot* you can tell how much heat your condenser is rejecting and whether to increase or decrease the amount of sub-cooling going on. By taking measurements before and after adjustments are made you can tell specifically what effect your changes had on the operation of the whole system. A tweak to the *head pressure regulator* will show up on a second plot, as would one to a metering device. The trick is to keep as much of the system as possible under the saturation curve. Because it is here, where liquid and vapor change state, that the work of the unit is performed.

Notice. This AFQTP is *NOT* intended to replace the applicable technical references nor is it intended to replace hands-on training. It is to be used in conjunction with these for training purposes only.

REVIEW QUESTIONS
FOR
PLOT PRESSURE ENTHALPY CHART FOR REFRIGERATION CYCLE

QUESTION	ANSWER
1. Where is the “V” point on the PE Chart?	a. On the vapor side of the high-pressure line. b. On the liquid side of the high-pressure line. c. On the intersection between saturation and the high-pressure line. d. On the intersection between saturation and the low-pressure line.
2. What must be added to change psig to psia?	a. 11.4 psi. b. 12.5 psi. c. 13.6 psi. d. 14.7 psi.
3. Where is the amount of de-super heating found?	a. Along the low-pressure line outside the saturation curve to the left. b. Along the high-pressure line outside the saturation curve to the left. c. Along the low-pressure line inside the saturation line. d. Along the high-pressure line inside the saturation curve.
4. Where is the amount of sub-cooling found?	a. Along the low-pressure line outside the saturation curve to the right. b. Along the high-pressure line outside the saturation curve to the right. c. Along the low-pressure line inside the saturation line. d. Along the high-pressure line inside the saturation curve.

Notice. This AFQTP is *NOT* intended to replace the applicable technical references nor is it intended to replace hands-on training. It is to be used in conjunction with these for training purposes only.

PLOT PRESSURE ENTHALPY CHART FOR REFRIGERATION CYCLE

PERFORMANCE CHECKLIST

INSTRUCTIONS:

The trainee must satisfactorily perform all parts of the task without assistance. Evaluate the trainee's performance using this checklist.

DID THE TRAINEE….	YES	NO
1. arrive at the job site with all tools and equipment?		
2. follow all safety precautions?		
3. take all measurements correctly?		
4. plot the information correctly?		
5. require any assistance from the trainer/certifier to complete the task?		
6. clean up job site when complete?		

FEEDBACK: Trainer should provide both positive and/or negative feedback to the trainee immediately after the task is performed. This will ensure the issue is still fresh in the mind of both the trainee and trainer.

Notice. This AFQTP is *NOT* intended to replace the applicable technical references nor is it intended to replace hands-on training. It is to be used in conjunction with these for training purposes only.

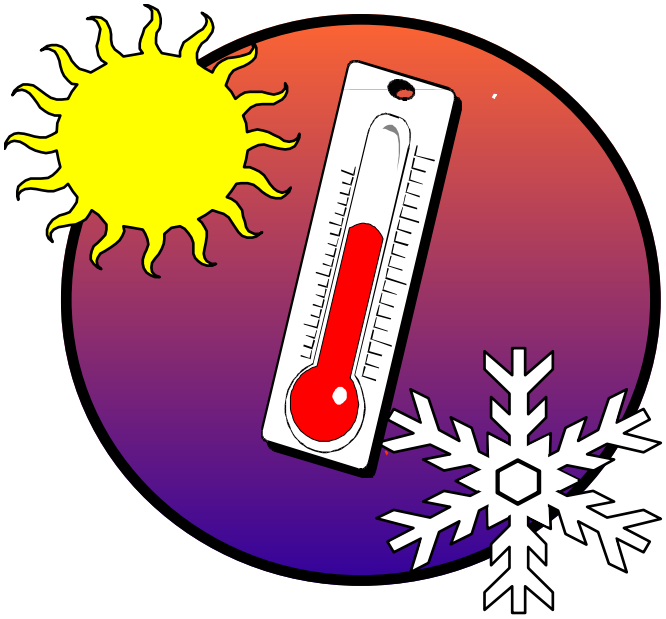

AIR CONDITIONING SYSTEMS

MODULE 21 AFQTP UNIT 5

MEASURE AIR CONDITIONING AND REFRIGERATION SYSTEM EFFICIENCY USING PRESSURE-TEMPERATURE CHARTS (21.5.3.8.)

Notice. This AFQTP is *NOT* intended to replace the applicable technical references nor is it intended to replace hands-on training. It is to be used in conjunction with these for training purposes only.

MEASURE AIR CONDITIONING AND REFRIGERATION SYSTEM EFFICIENCY USING PRESSURE-TEMPERATURE CHARTS

Task Training Guide

STS Reference Number/Title:	21.5.3.8. - Measure air conditioning and refrigeration system efficiency using pressure-temperature charts.
Training References:	1. Modern Refrigeration and Air Conditioning, 1996, Chapter 9, Page 337 Para 9.3, Page 357 Para 9.13, and Chapter 16, Page 646 Para 16.2.1. 2. Trane Air Conditioning Manual, Chapter 6, Pages 140 & 141. 3. Career Development Course (CDC) HVAC/R Journeyman 3E151F, Volume 1, Unit 1, Section 1-3: *Retrofitting Procedures*.
Prerequisites:	1. **Possess a minimum of a 3E131 AFSC.** 2. **Review the following references:** 2.1. Modern Refrigeration and Air Conditioning, 1996, Chapters 9 & 16. 2.2. CDC HVAC/R Journeyman 3E151F, Volume 1, Unit 1, Section 1-3.
Equipment/Tools Required:	1. Digital Thermometer. 2. Pressure gauges and P-T Chart. 3. Insulation material for thermometer. 4.
Learning Objective:	Given equipment, trainee will measure air conditioning and refrigeration system efficiency using pressure-temperature charts.
Samples of Behavior:	Trainee will know how to correctly measure air conditioning and refrigeration system efficiency using pressure-temperature charts.
Notes:	
Any safety violation is an automatic failure.	

Notice. This AFQTP is *NOT* intended to replace the applicable technical references nor is it intended to replace hands-on training. It is to be used in conjunction with these for training purposes only.

MEASURE AIR CONDITIONING AND REFRIGERATION SYSTEM EFFICIENCY USING PRESSURE-TEMPERATURE CHARTS

1. Background. Rarely will you find an HVAC/R technician without their pressure-temperature chart (P-T Chart) nearby. Now challenge any of these techs on the correct use of the P-T Chart to diagnose a problem and few of them would be able to. The objective of this lesson is to illustrate how powerful the P-T Chart can be in analyzing and diagnosing a refrigeration and/or air condition system.

2. Link between P-T Chart and Efficiency. The primary factor when designing a system is the energy efficiency ratio (EER). This is the ratio of the rated cooling capacity divided by the amount of electrical power used. Therefore, if a unit is not operating within the designed superheat/subcool envelope, the efficiency of the system will suffer. Once efficiency is lost, electrical consumption will elevate due to the compressor operating longer (trying to overcome abnormal pressures). The key to maintaining the rated cooling capacity is sustaining the correct superheat and subcooling. Should the superheat drift out of range, the evaporator will not be able to absorb the maximum heat load. High superheat equates to a starved evaporator (not enough refrigerant to absorb heat). Low superheat equates to a flooded evaporator (no room for flash-cooling to occur). Should the subcooling drift out of range; the metering device will not receive the correct quality (vapor free liquid) of liquid to allow flash cooling. In addition, out of range subcooling may result in premature flash gas in the liquid line. The P-T Chart with its defined scale is key to finding out superheat or subcooling. When used in conjunction with a thermometer and pressure gauges, the level of superheat and subcool can easily be measured.

3. Correlation.

3.1. Refrigerant is physically described in terms of pressure and temperature therefore; a brief review of a refrigerant system is warranted. Within a refrigerant system, three states exist:

3.1.1. Vapor.

3.1.2. Liquid.

3.1.3. Liquid-vapor mixture.

3.2. Every system has two sides, a low side and a high side. The low side begins from the outlet of the metering device, goes through evaporator, suction line and terminates in the compressor suction chamber. The high side begins from the compressor outlet (discharge chamber), through the discharge line, condenser (receiver if use), liquid line and terminates at the metering device inlet. The low side of the system typically contains vapor refrigerant (suction line & compressor suction chamber) or vapor-liquid mixture (metering device outlet and evaporator). Within the high side of the system, refrigerant in all three states can be found as follows:

3.2.1. All vapor in the compressor discharge chamber and discharge line.

3.2.2. A vapor-liquid mixture in the condenser (and receiver due to its inherent liquid level).

3.2.3. Pure liquid from approximately the last $^{1}/_{3}$ of the condenser bottom section (or outlet of receiver if use) to the metering device inlet.

NOTE:

Sight glasses or moisture indicators should be installed as close as possible to metering device inlet with zero accessories install after them. This will ensure true quality of the gas going to the metering device.

Notice. This AFQTP is *NOT* intended to replace the applicable technical references nor is it intended to replace hands-on training. It is to be used in conjunction with these for training purposes only.

4. Facts behind the P-T Card. The pressure and temperature union, as depicted on a P-T Chart, is valid only when a liquid-vapor mixture exists. This mixture occurs at the saturation temperature (the temperature where refrigerant changes state). The only three areas, in a trouble free system, where the P-T Chart can be used are the evaporator, condenser, and receiver since these areas will contain a mixture of liquid and vapor. Hence, if you can measure temperature from any one of these areas you can use the P-T Chart to locate the pressure and vice versa. If your measured pressure or temperature does not represent what's listed on the P-T Chart, you will have superheated vapor or subcooled liquid.

4.1. Superheated or Subcooled Refrigerant. Previously it was stated that when a vapor-liquid mixture exist, the refrigerant is saturated. Now, any temperature that swings above or below this threshold will either be superheated vapor or sub cooled liquid respectively. Subcool is defined as: Any heat removed from the refrigerant below its saturation temperature so long as the pressure remains constant. Superheat is defined as: Any heat added to the refrigerant above its saturation temperature so long as the pressure remains constant. Armed with these definitions, you can easily use the P-T Chart junction with a pressure gauge/thermometer to correctly analyze the refrigerant state at any point in a system.

Note:

1. *An electronic thermometer is **strongly** recommended to achieve precise results.*
2. Superheat is found on the vapor side of the system. Subcool is found on the liquid side of the system.

4.2. Reminder. At any point in the system, if your measured temperature and/or pressure do not represent what's on your P-T Chart, you will have either superheat or subcool.

5. Procedures. Follow these steps to measure air conditioning and refrigeration system efficiency using pressure-temperature charts:

Step 1: Following industry standards, connect a refrigerant pressure gauge or gauges to the high side or low side of the system.

Step 2: Convert measured pressure to temperature via P-T Chart.

Step 3: Record converted temperature.

Step 4: Affix a thermometer on the surface of the high or low side line(s).

Step 5: Insulate thermometer at point of contact with line surface to retard influence by ambient temperature.

Step 6: Record measured surface line temperature.

Step 7: Subtract converted temperature from measured surface temperature.

Step 8: Use the difference to determine if you have superheated vapor or subcool liquid.

Step 9: Compare superheat and/or subcool to unit's manufacture.

Step 10: If measured level(s) disagree(s) with manufacture's, exercise corrected action(s) and repeat steps 2 - 10 until manufacture's specification is reached.

Notice. This AFQTP is *NOT* intended to replace the applicable technical references nor is it intended to replace hands-on training. It is to be used in conjunction with these for training purposes only.

REVIEW QUESTIONS
FOR
MEASURE AIR CONDITIONING AND REFRIGERATION SYSTEM EFFICIENCY USING PRESSURE-TEMPERATURE CHARTS

QUESTION	ANSWER
1. What are the three states that a refrigerant will exist in any refrigerant system?	a. Liquid, oil, vapor. b. Vapor, Liquid, Gas. c. Mixture, Oil, Gas. d. Vapor, Liquid, Mixture.
2. What components are located in the low side of the system?	a. Receiver, Evaporator, Condenser. b. Evaporator, Compressor outlet, metering Device inlet. c. Compressor Inlet, Metering Device outlet, Evaporator. d. Condenser outlet, Metering Device inlet, Compressor outlet chamber.
3. To know the true state of the gas feeding the metering device, where should the sight glass or moisture indicator be installed?	a. Outlet of the condenser. b. Top of the receiver. c. Before liquid line drier. d. Last item in liquid line in proximity to metering device inlet.
4. On a normal operating system the P-T Chart can be use to tell you what about the refrigerant?	a. Refrigerant flow rate. b. State of the refrigerant. c. Oil content of the refrigerant. d. Refrigerant cooling capacity.
5. The two instruments that you will need to correctly use the P-T Chart are a pressure gauge and a thermometer.	a. True. b. False.
6. Any temperature below saturation temperature defines what?	a. Refrigeration. b. Superheat. c. Compression Ratio. d. Subcool.
7. What side of the system will you find superheat?	a. Evaporator side only. b. Condenser side. c. Suction side only. d. Vapor side.

Notice. This AFQTP is *NOT* intended to replace the applicable technical references nor is it intended to replace hands-on training. It is to be used in conjunction with these for training purposes only.

MEASURE AIR CONDITIONING AND REFRIGERATION SYSTEM EFFICIENCY USING PRESSURE-TEMPERATURE CHARTS

PERFORMANCE CHECKLIST

INSTRUCTIONS:

The trainee must satisfactorily perform all parts of the task without assistance. Evaluate the trainee's performance using this checklist.

DID THE TRAINEE….	YES	NO
1. connect gauge(s) on the system?		
2. convert measured pressure to temperature?		
3. measured surface line temperature?		
4. insulated thermometer at point of contact with surface?		
5. subtract converted temperature from measure temperature?		
6. determine whether refrigerant is superheated or subcooled?		

FEEDBACK: Trainer/Certifier should provide both positive and/or negative feedback to the trainee immediately after the task is performed. This will ensure the issue is still fresh in the mind of both the trainee and trainer/certifier.

Notice. This AFQTP is *NOT* intended to replace the applicable technical references nor is it intended to replace hands-on training. It is to be used in conjunction with these for training purposes only.

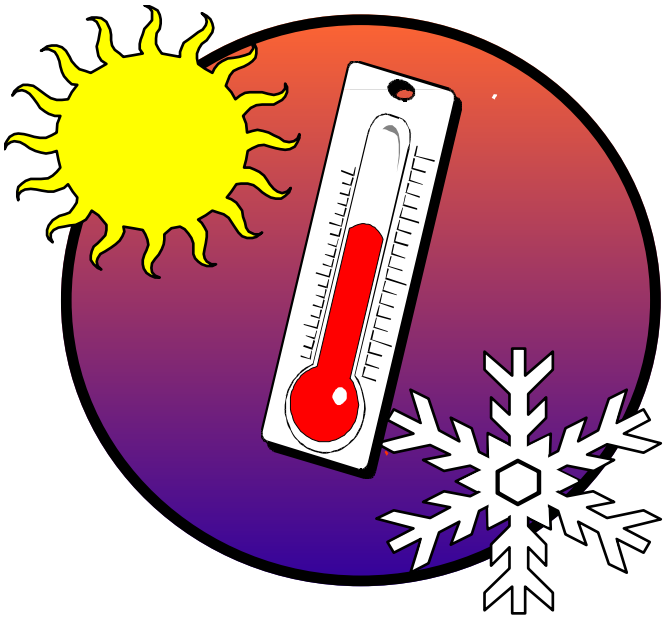

AIR CONDITIONING SYSTEMS

MODULE 21 AFQTP UNIT 5

CALCULATE AND ADJUST SUPERHEAT (21.5.3.9.)

Notice. This AFQTP is *NOT* intended to replace the applicable technical references nor is it intended to replace hands-on training. It is to be used in conjunction with these for training purposes only.

CALCULATE AND ADJUST SUPERHEAT

Task Training Guide

STS Reference Number/Title:	21.5.3.9. - Calculate and adjust superheat.
Training References:	1. Modern Refrigeration and Air Conditioning, 1996, Chapter 5 Pages185 – 187: *Superheat*. 2. Trane Air Conditioning Manual, Page 140 & 185. 3. Career Development Course (CDC) HVAC/R Journeyman 3E151F, Volume 1, Unit 1, Section 1-1, Lesson 004: *Characteristics of Refrigeration Metering Devices*.
Prerequisites:	1. **Possess a minimum of a 3E151 AFSC.** 2. **Review the following references:** 2.1. Modern Refrigeration and Air Conditioning, Chapter 5, Pages 185 - 187. 2.2. CDC HVAC/R Journeyman 3E151F, Volume 1, Unit 1, Section 1-1, Lesson 004.
Equipment/Tools Required:	1. P-T Chart. 2. Electronic thermometer. 3. Calibrated refrigerant pressure gauge. 4. Insulation material for thermometer.
Learning Objective:	Given equipment, trainee will be able to calculate and adjust superheat.
Samples of Behavior:	Trainee will know how to calculate and adjust superheat.
Notes:	
Any safety violation is an automatic failure.	

Notice. This AFQTP is *NOT* intended to replace the applicable technical references nor is it intended to replace hands-on training. It is to be used in conjunction with these for training purposes only.

CALCULATE AND ADJUST SUPERHEAT

1. Background. Every year in the HVAC/R industry, countless refrigerant system compressors are replaced due to incorrect superheat measurement and adjustments. The primary reason for this preventable error is technicians not investing the time in developing a sound understanding of system superheat calculation and adjustment. Another factor for this problem is the assumption that what works for one system will work for another. Superheat calculation and adjustment is a simple process; however, some technicians will choose to take costly shortcuts. The primary objective for this lesson is to deliver essential knowledge required so technicians can correctly calculate and adjust superheat.

1.1. What is Superheat? To understand superheat, you must understand its origin. At certain stages within the refrigeration system, the refrigerant will reach its boiling point or condensing temperatures. This temperature (boiling/condensing) is known as the saturation temperature. This is when transformation takes place. The refrigerant will change state from a liquid to a vapor and vice versa. Superheat can be detected once saturation temperature is reached. If heat is added to the refrigerant after saturation temperature is reached and the pressure remain constant, vaporization will commence. This added heat is known as superheat. In layman's term, superheat is refrigerant vapor that is heated above its boiling temperature.

Rule: If a refrigerant is superheated, no liquid is present.

NOTE:
The saturation temperature is dependent on the pressure that's exerted on to the refrigerant. The P-T Chart is the focal point for locating this pressure/temperature.

1.2. Significant of Superheat. Superheat can be found at various points throughout the system. However, for the purpose of this lesson, we will focus on suction side (low side) superheat. Correct superheat calculation can provide data on metering device, evaporator, and compressor performance. By far, preventing liquid refrigerant from reaching the compressor is the most vital reason to ensure correct suction side superheat. Refrigerant Compressors are not constructed to compress liquid. Catastrophic failure will ultimately occur if liquid refrigerant enter the compressor chambers.

NOTE:
System manufactures publish superheat temperatures for all their equipment. With the explosion of modern technology, system superheat setting can easily be retrieve from manufactures. Guesswork work must be eliminated!

HINT:
Most Thermostatic Expansion Valves (TEVs) come equipped with an adjustment stem. System designed superheat setting must be adhered to when adjusting superheat. For non-adjustable TEVs, valve manufactures must be consulted. Superheat adjustment for fix orifices metering devices is accomplished by recovering or adding refrigerant to raise or lower superheat respectively.

Notice. This AFQTP is *NOT* intended to replace the applicable technical references nor is it intended to replace hands-on training. It is to be used in conjunction with these for training purposes only.

CAUTION:

1. **VERIFY SYSTEM HAS CORRECT CHARGE BEFORE MAKING TEV SUPERHEAT ADJUSTMENT.**
2. **PREVENT VALVE OVER-SHOOTING WHEN ADJUSTING; MAKE ONLY ONE TURN OF THE VALVE AT A TIME.**
3. **ALLOW SYSTEM TO STABILIZED UP TO 30 MINUTES BETWEEN ADJUSTMENT THEN RE-MEASURE SUPERHEAT.**

1.3. The manifold gauges used in the field come equip with a P-T Chart on the gauges' scales. However, these scales are not defined like the pocket-type or other larger P-T Chart. Therefore, it's strongly recommended not to use the P-T Chart on the gauges when performing superheat calculations.

2. Procedures. Follow these steps to calculate and adjust superheat:

Step 1: Measure suction line surface temperature at TEV sensing bulb location (the use of an electronic thermometer will prove to yield a more precise reading).

Step 2: Insulate thermometer to prevent influence by ambient temperature.

Step 3: Record measured surface line temperature.

Step 4: Following industry standards, connect a manifold gauge or equal substitute to system suction line.

Step 5: Use P-T Chart and convert measured pressure to temperature.

Step 6: Record converted P-T Chart temperature.

Step 7: Subtract converted P-T Chart temperature from measured surface temperature to get degree(s) of superheat. This is your actual superheat.

Step 8: Compare degree(s) superheat against the unit manufacture's specified degree(s) of superheat.

Step 9: If the actual system superheat matches the manufacture's specified superheat, the system's expansion valve does not need adjustment and this procedure is complete. For systems with fixed orifices, the refrigerant charge does not need adjustment and this procedure is complete. If the actual system superheat does not match the manufactures' specified superheat, proceed to step 10.

Step 10: To increase superheat, turn valve stem clockwise (for fix orifices you must recover refrigerant). To decrease superheat, turn valve stem counter-clockwise (for fix orifices you must add refrigerant).

Step 11: Allow system to stabilize for at least 30 minutes, then recheck the superheat.

Step 12: Repeat steps 7 thru 11 until proper superheat is obtained.

Notice. This AFQTP is *NOT* intended to replace the applicable technical references nor is it intended to replace hands-on training. It is to be used in conjunction with these for training purposes only.

REVIEW QUESTIONS
FOR
CALCULATE AND ADJUST SUPERHEAT

QUESTION	ANSWER
1. What state will the refrigerant be in when superheated?	a. Moisture. b. Vapor. c. Liquid. d. Warm.
2. Refrigerant saturation temperature, boiling point, and condensing temperature describes the same condition.	a. True. b. False.
3. Saturation temperature must be reached before superheat can be detected.	a. True. b. False.
4. What is one of the primary reasons to maintain a correct superheat setting?	a. Prevent excessive discharge pressure. b. Prevent vapor from entering condenser. c. Prevent liquid from entering compressor. d. Prevent liquid line flash gas.
5. Where can a technician find information about system superheat?	a. Shop supervisor. b. Manufacture of system. c. Technician who installed equipment. d. Manufacture of system compressor.
6. When adjusting a TEV to obtain proper superheat, rotate the stem _____to increase superheat.	a. counter clockwise b. clock wise c. clockwise then counter clockwise d. counter clockwise then clockwise
7. Prior to making a superheat adjustment, the technician must ensure the system _____is correct.	a. liquid line flash gas b. suction pressure c. mixture of oil and refrigerant d. charged

Notice. This AFQTP is *NOT* intended to replace the applicable technical references nor is it intended to replace hands-on training. It is to be used in conjunction with these for training purposes only.

CALCULATE AND ADJUST SUPERHEAT

PERFORMANCE CHECKLIST

INSTRUCTIONS:

The trainee must satisfactorily perform all parts of the task without assistance. Evaluate the trainee's performance using this checklist.

DID THE TRAINEE….	YES	NO
1. correctly verify system charge?		
2. correctly measure suction line temperature?		
3. correctly use P-T Chart to convert temperature/pressure?		
4. correctly analyzed measure superheat against manufactures' data?		
5. demonstrate correctly how to increase or decrease superheat for both TEV and fix orifices?		
6. allow correct time span and execute recheck?		

FEEDBACK: Trainer/Certifier should provide both positive and/or negative feedback to the trainee immediately after the task is performed. This will ensure the issue is still fresh in the mind of both the trainee and trainer/certifier.

Notice. This AFQTP is *NOT* intended to replace the applicable technical references nor is it intended to replace hands-on training. It is to be used in conjunction with these for training purposes only.

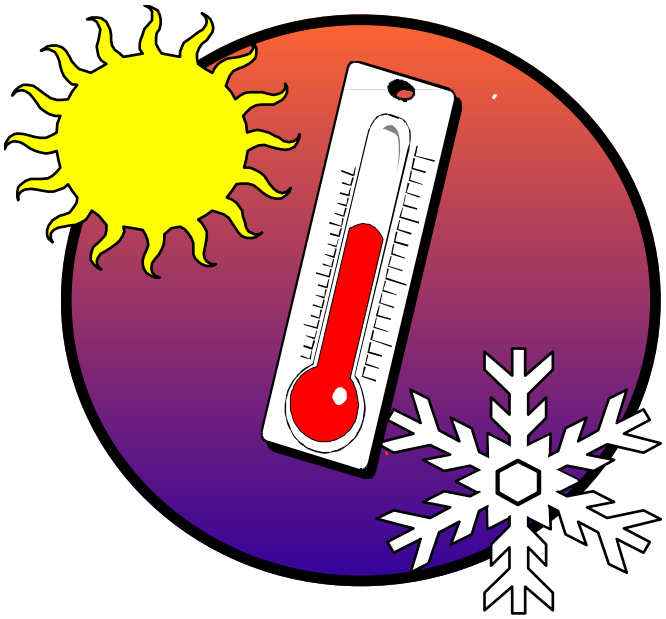

AIR CONDITIONING SYSTEMS

MODULE 21 AFQTP UNIT 5

CALCULATE SUBCOOLING (21.5.3.10.)

Notice. This AFQTP is *NOT* intended to replace the applicable technical references nor is it intended to replace hands-on training. It is to be used in conjunction with these for training purposes only.

CALCULATE SUBCOOLING

Task Training Guide

STS Reference Number/Title:	21.5.3.10. - Calculate subcool.
Training References:	1. Modern Refrigeration and Air Conditioning, 1996, Chapter 16, Page 646, Paragraph 6.2.1: *Pressure-Heated Diagram*. 2. Trane Air Conditioning Manual, Chapter 6, Page-141. 3. Career Development Course (CDC) HVAC/R Journeyman 3E151F, Volume 1, Unit 2, Sections 2-2 through 2-4.
Prerequisites:	1. **Possess a minimum of a 3E151 AFSC.** 2. **Review the following references:** 2.1. Modern Refrigeration and Air Conditioning, Chapter 16, Page 646, Paragraph 6.2.1. 2.2. CDC HVAC/R Journeyman 3E151F, Volume 2, Section 2-2 through 2-4.
Equipment/Tools Required:	1. P-T Chart. 2. Electronic thermometer. 3. Refrigerant calibrated pressure gauge. 4. Insulation material for thermometer.
Learning Objective:	Given equipment, trainee will be able to calculate subcooling.
Samples of Behavior:	Trainee will know how to calculate subcooling.
Notes:	
Any safety violation is an automatic failure.	

CALCULATE SUBCOOLING

1. Background. Refrigerant subcooling is a demonstrated and reliable way of increasing refrigerant cooling capacity. The thermostatic expansion valve (TEV) maintains a constant superheat over a wide range of load conditions. Because of this, superheat-charging method on TEV systems (or other systems using similar devices) must not be use. Instead, use the subcooling method to check system charge. The focus of this lesson is to both provide a sound understanding of subcooling and cover subcool measurement procedures.

1.1. Benefits of Subcooling. Correct subcooling is critical to optimum operation of a system. One of the primary factors of subcooling the refrigerant is preventing flash gas from impeding TEV refrigerant flow. As a result of subcooling, system cooling capacity increases and compressor amperages may decrease. This will cause lower electrical demand and energy consumption.

1.2. What is Subcooling? Subcooling is a term use to describe the process of cooling a liquid refrigerant to a point below its condensing temperature (so long as the pressure remains constant). On a normal operating system, subcooling will be located on the liquid side of the system. The subcool zone stems from the bottom of the condenser to the inlet of the metering device. Most manufactures developed their systems to maintain a 10 – 20 degree subcool. Remember, maximum metering device operations hinges on the quality of liquid the valve receives. Correct subcooling will deliver this vapor free quality of liquid.

NOTE:

1. For exact degree(s) of subcooling for a particular unit, consult unit manual or manufacture.
2. Two liquid line temperature measurements (beginning and end of run) will be require if the metering device is located at a great distance from the condenser. This will reveal any pressure drop in the line.
3. Add refrigerant to lower subcool temperature and recover refrigerant to raise subcool temperature.

HINT:

1. The liquid line must be insulated if it's absorbing heat during tube travel to the metering device.
2. Too much subcool will result in pressure drop and/or liquid line flash gas.
3. *A tolerance of +/- 3 degrees is allowed before any subcool adjustment is required.*

1.3. The manifold gauges used in the field come equip with a P-T Chart on the gauges' scales. However, these scales are not defined like the pocket-type or other larger P-T Chart. Therefore, it's strongly recommended not to use the P-T Chart on the gauges when performing superheat calculations.

2. Procedures. Follow these steps to calculate subcooling:

CAUTION:

ALLOWED SYSTEM TO STABILIZE FOR 15 MINUTES BEFORE MEASURING OR ADJUSTING SUBCOOL.

Notice. This AFQTP is *NOT* intended to replace the applicable technical references nor is it intended to replace hands-on training. It is to be used in conjunction with these for training purposes only.

Step 1: Affix a thermometer on the surface of the condenser outlet tube or before liquid line service valve (if unit is equip with one). *View item two in the "note box" of this document.*

Step 2: Insulate thermometer at point of contact with line surface to retard influence by ambient temperature.

Step 3: Measure the pressure at the liquid line service valve.

Step 4: Use P-T Chart and convert pressure to temperature.

Step 5: Subtract the measured temperature from the converted temperature.

Step 6: The difference is your level of subcooling.

Step 7: Compare subcool level to the manufactures' specification.

Step 8: Take appropriate system action(s) if level is out of range. *(View item three in the "note box" of this document)***.**

Step 9: Repeat step 1 - 7 until required result is achieved.

Notice. This AFQTP is *NOT* intended to replace the applicable technical references nor is it intended to replace hands-on training. It is to be used in conjunction with these for training purposes only.

REVIEW QUESTIONS
FOR
CALCULATE SUBCOOLING

QUESTION	ANSWER
1. A technician must _____ refrigerant to decrease subcooling.	a. recycle b. recover c. add d. throttle down
2. What does the term subcooled refrigerant mean?	a. Refrigerant heated above condensing temperature. b. Refrigerant at condensing temperature. c. Refrigerant below condensing temperature. d. Refrigerant de-superheating temperature.
3. What is the minimum amount of time that a system must operate before measuring/adjusting subcooling?	a. 30 Minutes. b. 25 Minutes. c. 20 Minutes. d. 15 Minutes.
4. Correct system subcooling will optimize system performance.	a. True. b. False.
5. Where does the subcool zone begins and end on a refrigeration system?	a. From metering device to evaporator outlet. b. From compressor to metering device. c. From last ½ of condenser to metering device. d. From condenser to evaporator outlet.
6. Refrigerant liquid must be_____ for correct metering device operation.	a. oil free b. vapor free c. chemical free d. Both a & b.
7. What is the maximum allowable temperature deviation from the manufacturer's specification before adjusting subcooling?	a. +/- 1 degree. b. +/- 2 degrees. c. +/- 3 degrees. d. +/- 4 degrees.

Notice. This AFQTP is *NOT* intended to replace the applicable technical references nor is it intended to replace hands-on training. It is to be used in conjunction with these for training purposes only.

CALCULATE SUBCOOLING

PERFORMANCE CHECKLIST

INSTRUCTIONS:

The trainee must satisfactorily perform all parts of the task without assistance. Evaluate the trainee's performance using this checklist.

DID THE TRAINEE….	YES	NO
1. allowed prescribed time for system to stabilized?		
2. correctly measure liquid line temperature?		
3. completely insulate thermometer form ambient temperature?		
4. correctly convert measured temperature and pressure?		
5. compare subcool level to manufacture's specification?		
6. demonstrated course of action for out of range subcool reading?		

FEEDBACK: Trainer/Certifier should provide both positive and/or negative feedback to the trainee immediately after the task is performed. This will ensure the issue is still fresh in the mind of both the trainee and trainer/certifier.

Notice. This AFQTP is *NOT* intended to replace the applicable technical references nor is it intended to replace hands-on training. It is to be used in conjunction with these for training purposes only.

Air Force Civil Engineer

QUALIFICATION TRAINING PACKAGE (QTP)

REVIEW ANSWER KEY

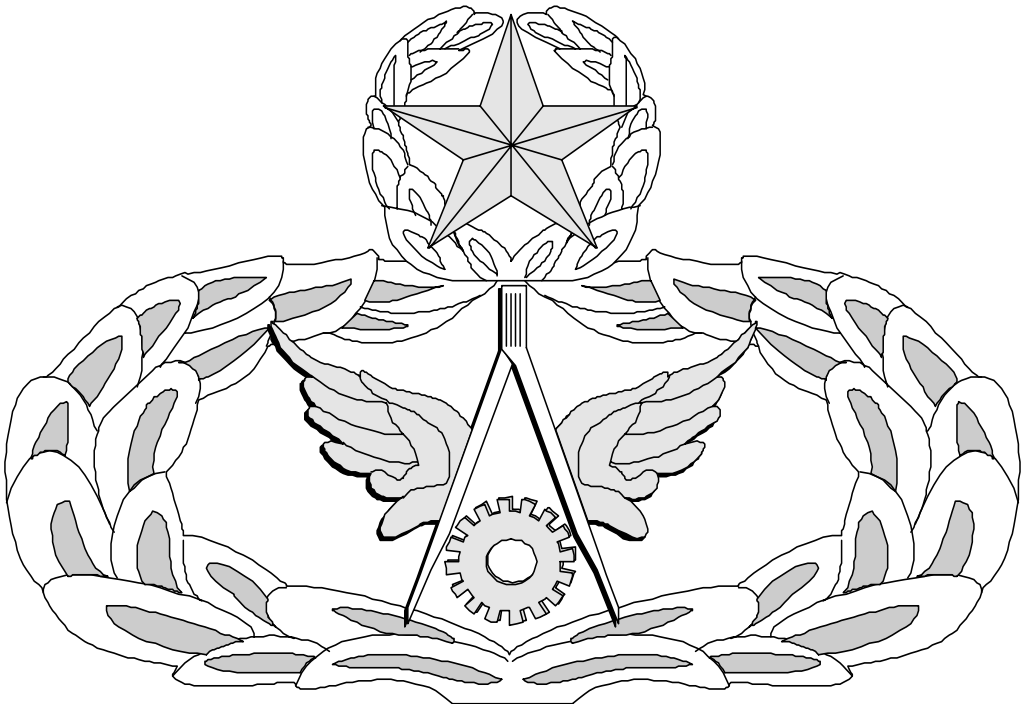

FOR

HEATING, VENTILATION, AIR CONDITIONING/REFRIGERATION (HVAC/R) (3E1X1)

MODULE 21

AIR CONDITIONING & REFRIGERATION SYSTEMS

Notice. This AFQTP is *NOT* intended to replace the applicable technical references nor is it intended to replace hands-on training. It is to be used in conjunction with these for training purposes only.

LOCATE REFRIGERANT LEAKS
(3E1X1-21.3.1.)

QUESTION	ANSWER
1. Refrigeration systems must be absolutely gas tight.	a. True.
2. What must the service specialist check before charging a system?	d. Check to insure all leaks have been repaired.
3. For any appliance containing more than _____ pounds of refrigerant, the owner must keep a record of all refrigerants charged into that appliance.	a. 50
4. Pressurizing newly installed split systems or built-up systems with HCFC or CFC refrigerants for leak checking is a standard practice.	b. False.
5. What are three of the most commonly used leak detectors in the HVAC/R Field?	d. Electronic, soap bubbles, and nitrogen.
6. When leak checking, how much refrigerant do you introduce into the system?	c. Until the gauge reads 10 ps
7. You must never place two nitrogen regulators in parallel.	b. False.
8. What two components must be used with nitrogen cylinders?	d. Regulator and pressure relive valve.

RECOVER AND RECYCLE REFRIGERANTS FROM REFRIGERATION AND AIR CONDITIONING SYSTEMS
(3E1X1 21.3.3.)

QUESTIONS	ANSWERS
1. Recycling refrigerant is the act of bringing the refrigerant to factory specifications.	b. False.
2. The EPA is the only authority able to certify recovery equipment.	b. False.
3. Very high-pressure appliances containing CFC-503 must be evacuated to what pressure?	c. 0 psi.
4. In reclaim equipment how is the refrigerant introduced to the equipment?	d. As either liquid or vapor.
5. If refrigerant contacts the skin it can cause?	c. Frostbite.
6. All HVAC personnel in the Air Force will be certified as a _____.	d. Universal technician.

Notice. This AFQTP is *NOT* intended to replace the applicable technical references nor is it intended to replace hands-on training. It is to be used in conjunction with these for training purposes only.

PUMP DOWN REFRIGERATION SYSTEM
(3E1X1-21.3.4.)

QUESTION	ANSWER
1. The act of *using the compressor* to move and store the refrigerant in the receiver or condenser is defined as pump down.	a. True.
2. At what pressure is the compressor stopped?	a. 1 - 5 PSIG.
3. For any service work requiring access to the compressor or the sealed part of the system, the refrigerant must first be removed.	a. True.
4. The pump down procedure is accomplished by closing the valve at the outlet of the receiver or condenser while the _____ is operating.	a. compressor
5. If it is necessary to remove or gain access to the discharge line, condenser, or receiver, pumping the system down is of no benefit, and the refrigerant charge must be removed unless there are valves to isolate the defective component.	a. True.

PRESSURE CHECK REFRIGERATION SYSTEMS
(3E1X1-21.3.5.)

QUESTION	ANSWER
1. The manifold has three ports to connect service hoses.	a. True.
2. What pressure gauge indicates pressure both above and below atmospheric pressure?	a. Compound gauge.
3. What color is the low side gauge?	c. Blue.
4. What color is the high side gauge?	a. Red.
5. The high side pressure gauge scale ranges from _____ to _____.	d. 0 – 500psig.
6. What are the two measurement listed on the manifold gauges scale?	d. Pressure and saturation temperature.
7. The three fluid used with the manifold gauges are refrigerant oil, refrigerant and inert gas.	b. True.

Notice. This AFQTP is *NOT* intended to replace the applicable technical references nor is it intended to replace hands-on training. It is to be used in conjunction with these for training purposes only.

CHARGE HVAC/R SYSTEMS WITH REFRIGERANT
(3E1X1-21.3.6.)

QUESTION	ANSWER
1. What is the most accurate refrigerant charging procedure?	a. Weight.
2. A liquid line sight glass will show bubbles if the system _____.	a. has vapor in the liquid line.
3. When charging a system using a 400 series refrigerant, you must use the vapor charging method.	b. False.
4. Refrigerant is charge into the system in these two states _____ and _____.	a. vapor / liquid.
5. What is the charging method to use when a heat pump is operating in the heat mode?	c. Weight.
6. What are the two methods of charging a system that employs a TEV?	d. Weight and subcool.
7. A fix orifice system should be charge with the weight or superheat method.	a. True.

PLOT PRESSURE ENTHALPY CHART FOR REFRIGERATION CYCLE
(3E1X1-21.5.3.7.)

QUESTION	ANSWER
1. Where is the “V” point on the PE Chart?	d. On the intersection between saturation and the low pressure line
2. What must be added to change psig to psia?	d. 14.7 psi.
3. Where is the amount of de-super heating found?	b. Along the high pressure line outside the saturation curve to the left.
4. Where is the amount of sub-cooling found?	b. Along the high pressure line outside the saturation curve to the right.

Notice. This AFQTP is *NOT* intended to replace the applicable technical references nor is it intended to replace hands-on training. It is to be used in conjunction with these for training purposes only.

MEASURE AIR CONDITIONING AND REFRIGERATION SYSTEM EFFICIENCY USING PRESSURE-TEMPERATURE CHARTS
(3E1X1-21.5.3.8.)

QUESTION	ANSWER
1. What are the three states that a refrigerant will exist in any refrigerant system?	d. Vapor, Liquid, Mixture.
2. What components are located in the low side of the system?	c. Compressor Inlet, Metering Device outlet, Evaporator
3. To know the true state of the gas feeding the metering device, where should the sight glass or moisture indicator be installed?	d. d. Last item in liquid line in proximity to metering device inlet
4. On a normal operating system the P-T Chart can be use to tell you what about the refrigerant?	b. State of the refrigerant.
5. The two instruments that you will need to correctly use the P-T Chart are a pressure gauge and a thermometer.	a. True.
6. Any temperature below saturation temperature defines what?	d. Subcool.
7. What side of the system will you find superheat?	d. Vapor side.

CALCULATE AND ADJUST SUPERHEAT
(3E1X1-21.5.3.9.)

QUESTION	ANSWER
1. What state will the refrigerant be in when superheated?	b. Vapor.
2. Refrigerant saturation temperature, boiling point, and condensing temperature describes the same condition.	a. True.
3. Saturation temperature must be reached before superheat can be detected.	a. True.
4. What is one of the primary reasons to maintain a correct superheat setting?	c. Prevent liquid from entering compress.
5. Where can a technician find information about system superheat?	b. Manufacture of system.
6. When adjusting a TEV to obtain proper superheat, rotate the stem _____ to increase superheat.	b. clock wise
7. Prior to making a superheat adjustment, the technician must ensure the system is _____correctly.	d. charged

Notice. This AFQTP is *NOT* intended to replace the applicable technical references nor is it intended to replace hands-on training. It is to be used in conjunction with these for training purposes only.

CALCULATE SUBCOOLING
(3E1X1-21.5.3.10.)

QUESTION	ANSWER
1. A technician must _____ refrigerant to decrease subcooling.	c. add.
2. What does the term subcooled refrigerant mean?	c. Refrigerant below condensing temperature.
3. What is the minimum amount of time that a system must operate before measuring/adjusting subcooling?	d. 15 minutes.
4. Correct system subcooling will optimize system performance.	a. True.
5. Where does the subcool zone begins and end on a refrigeration system?	c. From last ½ of condenser to metering device.
6. Refrigerant liquid must be_____ for correct metering device operation.	b. B. vapor free
7. What is the maximum allowable temperature deviation from the manufacturer's specification before adjusting subcooling?	c. +/- 3 degrees.

Notice. This AFQTP is *NOT* intended to replace the applicable technical references nor is it intended to replace hands-on training. It is to be used in conjunction with these for training purposes only.

MEMORANDUM FOR HQ AFCESA/CEOF
139 Barnes Drive Suite 1
Tyndall AFB, FL 32403-5319

FROM:

SUBJECT: Air Force Qualification Training Package Improvement

1. Identify module.

   Module # and title_____

2. Identify improvement/correction section(s)

   _____ STS Task Reference
   _____ Training Reference
   _____ Evaluation Instructions
   _____ Performance Resources
   _____ Steps in Task Performance
   _____ Performance Checklist
   _____ Feedback
   _____ Format
   _____ Other

3. Recommended changes--use a continuation sheet if necessary.

   _____
   _____
   _____
   _____
   _____
   _____
   _____
   _____

4. You may choose to call in your recommendations to DSN 523-6445 or FAX DSN/Commercial 523-6488 or (850) 283-6488 or email ceof.helpdesk@tyndall.af.mil.

5. Thank you for your time and interest.

YOUR NAME, RANK, USAF
Title/Position