INCH-POUND

MIL-HDBK-1005/16
31 OCTOBER 1997

SUPERSEDING
TM-5-814-3
AFM 88-11
VOLS. 1, 2, AND 3
MARCH 1985
MIL-HDBK 1005/8
FEBRUARY 1997

DEPARTMENT OF DEFENSE
HANDBOOK

WASTEWATER TREATMENT SYSTEM DESIGN
AUGMENTING HANDBOOK

AMSC N/A AREA FACR

Distribution Statement A. APPROVED FOR PUBLIC RELEASE:
DISTRIBUTION IS UNLIMITED.

ABSTRACT

This handbook augments six Water Environment Federation (formerly Water Pollution Control Federation) manuals selected by the Department of Defense to serve as basic design guidance. These Water Environment Federation (WEF) manuals address most topics pertinent to wastewater treatment system design. However, some topics important to military facilities are not covered in detail in the WEF manuals or require particular emphasis. This handbook addresses those topics and includes the following topic areas: wastewater treatment facility planning and design development (including regulatory compliance and management), wastewater flow rates and characteristics, Navy wastewater collection and transmission systems, oil and water separators, package plants and small flow treatment systems, lagoon systems, chemical storage and handling considerations, effluent disposal/ reclamation, solids conveyance and solids pretreatment, laboratory facilities and sample collection system design, and corrosion control.

FOREWORD

This handbook is approved for use by all Departments and Agencies of the Department of Defense. It is intended to guide the reader in the design of wastewater treatment systems. Commercial equipment and materials mentioned in this handbook are included for illustration purposes and do not constitute an endorsement.

Beneficial comments (recommendations, additions, deletions) and any pertinent data which may be of use in improving this document or the WEF manuals should be submitted on the DD Form 1426 Standardization Document Improvement Proposal and addressed through major commands to:

Air Force: HQ AFCESA/CESC, 139 Barnes Dr., Suite 1, Tyndall AFB, FL 32403-5319.

Army: HQ USACE/CEMP-ET, 20 Massachusetts Avenue, Northwest, Washington, DC 20314-1000.

Navy: NAVFAC Criteria Office, 1510 Gilbert St., Norfolk, VA 23511-2699.

DO NOT USE THIS HANDBOOK AS A REFERENCE IN A PROCUREMENT DOCUMENT FOR FACILITIES CONTRUCTION. IT IS TO BE USED IN THE PURCHASE AND PREPARATION OF FACILITIES PLANNING AND ENGINEERING STUDIES AND DESIGN DOCUMENTS USED FOR THE PROCUREMENT OF FACILITIES CONSTRUCTION (SCOPE, BASIS OF DESIGN, TECHNICAL REQUIREMENTS, PLANS, SPECIFICATIONS, COST ESTIMATES, REQUEST FOR PROPOSALS, AND INVITATION FOR BIDS). DO NOT REFERENCE IT IN MILITARY OR FEDERAL SPECIFICATIONS OR OTHER PROCUREMENT DOCUMENTS.

WASTEWATER TREATMENT SYSTEM DESIGN CRITERIA MANUALS

Criteria Manual	Title	Preparing Activity
MIL-HDBK-1005/9	Industrial and Oily Wastewater Control	NAVFACENGCOM 15C
EI 11C201	Wastewater Collection and Pumping	HQ USACE-CEMP

Military-adopted commercial wastewater treatment system guidance (Primary Design Guidance Document), published by WEF:

Design of Municipal Wastewater Treatment Plants (Manual of Practice [MOP] 8, Volumes I and II) (Jointly published with the American Society of Civil Engineers [ASCE] as Report on Engineering Practice No. 76.)

Gravity Sanitary Sewer Design and Construction (MOP FD-5) (Jointly published with ASCE as Report on Engineering Practice No. 60.)

Design of Wastewater and Stormwater Pumping Stations (MOP FD-4)

Alternative Sewer Systems (MOP FD-12)

Existing Sewer Evaluation and Rehabilitation (MOP FD-6) (Jointly published with ASCE as Report on Engineering Practice No. 62.)

Wastewater Disinfection (MOP FD-10)

WASTEWATER TREATMENT SYSTEM DESIGN
GUIDANCE DOCUMENT AUGMENTING HANDBOOK

CONTENTS

			Page
Section	1	INTRODUCTION	
	1.1	Scope of This Handbook	1
	1.1.1	Use and Limitations	1
	1.1.2	Primary Design Guidance Documents	1
	1.1.3	Augmenting Handbook	2
	1.2	Organization of Handbook	2
	1.3	Cancellation	3
Section	2	WASTEWATER TREATMENT FACILITY PLANNING AND DESIGN DEVELOPMENT	
	2.1	Introduction	4
	2.2	Regulatory Compliance and Management	4
	2.2.1	Federally Owned Treatment Works (FOTWs)	4
	2.2.2	Permitting Requirements	5
	2.2.2.1	Stormwater NPDES Permit	6
	2.2.2.2	Residual Solids Permit	6
	2.2.3	Permit Renewal	6
	2.2.4	Permit Application Forms	7
	2.3	Governing Effluent Limitations	7
	2.3.1	Current Trends in the Wastewater Industry That Affect Effluent Permitting	7
	2.3.2	Water Quality Standards	7
	2.3.2.1	Waste Load Allocation	8
	2.3.2.2	Chemical-Specific Criteria	8
	2.3.3	Wastewater Effluent Toxicity	9
	2.3.3.1	Aquatic Life Criteria	9
	2.3.3.2	General Narrative Criteria	9
	2.3.4	Negotiation of Effluent Limits	9
	2.3.5	Wastewater Reuse	10
	2.3.6	Land Disposal	11
	2.4	Design Requirements for Cold Climates	11
	2.5	Facilities Planning	12
	2.5.1	Capacity Analysis Report	12
	2.5.2	Operation and Maintenance Report	13
	2.6	Programming	13

Page

2.7	Preliminary Engineering Report	13
2.7.1	Design Basis	13
2.7.2	Alternatives Evaluations	14
2.7.2.1	Life-Cycle Costs Evaluation	15
2.7.2.2	Non-Monetary Evaluation	15
2.7.2.3	Alternatives Selection	16
2.7.3	Recommended Plan	18
2.7.4	Beneficial Reuse of Solids	18
2.8	O&M Manuals	19
2.8.1	Operations Manual	19
2.8.2	Maintenance Manual	20
2.8.3	Maintenance Summary Forms	22
2.9	Startup Training	23
2.10	Performance Testing	23
Section 3	WASTEWATER FLOW RATES AND CHARACTERISTICS	
3.1	Introduction	25
3.2	Wastewater Sources and Characteristics	25
3.2.1	Domestic Wastewater Flow	25
3.2.2	Infiltration and Inflow	25
3.2.3	Industrial Wastewater	27
3.2.3.1	Vehicle and Aircraft Maintenance and Wash Facilities	27
3.2.3.2	Additional Resources	28
3.2.3.3	Closed-Loop Recycling	28
3.2.4	Ship Holding Tank Discharges	30
3.3	Quantifying Wastewater Flows and Loads-Design Basis Development	31
3.3.1	Wastewater Flow Estimate Terminology	31
3.3.2	Flow Estimating Methodology	32
3.3.2.1	Design Populations	32
3.3.2.2	Domestic Flows, Annual Average	33
3.3.2.3	Domestic Flows, Maximum Daily Flow	33
3.3.2.4	Domestic Flow, Peak Flow	34
3.3.2.5	Domestic Flows, Minimum Flow	35
3.3.2.6	Infiltration	35
3.3.2.7	Inflow	35
3.3.2.8	Industrial Flows	35

Page

3.3.2.9 Ship Discharges 36
3.3.2.10 Flow Rate Variations 36
3.3.3 Wastewater Loadings 40
3.3.3.1 Domestic Wastes 40
3.3.3.2 Industrial Wastes 40
3.3.3.3 Ship Sewage 40
3.3.3.4 Effect of Wastewaters with High Seawater Content 41

Section 4 NAVY WASTEWATER COLLECTION AND TRANSMISSION SYSTEMS
4.1 Introduction 43
4.2 Pier and Wharf Systems 43
4.2.1 Layout/Location 43
4.2.2 Utility Connections 46
4.2.3 Environmental Considerations (Corrosion, Freeze Protection) 51
4.2.4 Odor/Septicity Control 53
4.2.5 Structures and Appurtenances 53
4.2.6 Pump Stations 53
4.2.7 Pipe 53
4.2.8 Sewage Transfer Hoses 56
4.3 Drydock Facilities 56
4.3.1 Layout 60
4.3.2 Pump Station Features 60
4.3.3 Sewage Receiving Connections and Transfer Hoses 60
4.3.4 Special Structures and Appurtenances 60

Section 5 OIL/WATER SEPARATORS
5.1 Section Overview 65
5.2 Oil Classification.. 65
5.2.1 Fre Oil 65
5.2.2 Emulsified Oil 65
5.2.3 Oily Wastes 65
5.3 Basis for Considering Oil/Water Separators 66
5.3.1 Regulatory Compliance 66
5.3.2 Related Impacts on Collection/Treatment Systems 67

Page

5.4 Evaluating the Need for Oil/Water Separators 67
5.5 Treatment Technology.. 70
5.5.1 Gravity Separation. 70
5.5.1.1 Conventional Gravity Separators. 71
5.5.1.2 Parallel Plate Separators. 73
5.5.2 Air Flotation Separators.. 74
5.5.3 Treatment of Emulsified Oil 75
5.5.3.1 Destabilization. 75
5.5.3.2 Chemical Processes.. 75
5.5.3.3 Mechanical Impingement and Filtration Processes. 77
5.5.4 Treatment of Dissolved Oil.. 77
5.6 Design of OWSs.. 77
5.6.1 Wastewater Characterization.. 78
5.6.2 Site Considerations 78
5.6.3 Establishing the Design Flow 78
5.6.4 Design Criteria for Conventional Separators 79
5.6.5 Design Criteria for Parallel-Plate Separators. 80
5.7 Oil/Sludge Removal and Disposal. 81
5.8 Guidance Documents.. 81

Section 6 PACKAGE PLANTS AND SMALL FLOW TREATMENT SYSTEMS
6.1 General 83
6.1.1 Types of Small Flow Treatment Systems 83
6.1.2 Unique Characteristics of Small Flow Treatment Systems 83
6.2 Package Plant Systems 84
6.2.1 Types of Treatment Processes 84
6.2.2 Evaluation of Particular Packages 84
6.2.3 Performance Certification 84
6.2.4 Capacity Ranges 84
6.3 Septic Tank Systems 89
6.3.1 Size 89
6.3.2 Detention Time 91
6.3.3 Effluent Disposal 91
6.3.3.1 Subsurface Absorption 91
6.3.3.2 Leaching Wells 92
6.3.3.3 Subsurface Sand Filters 92
6.3.3.4 Percolation Tests 94

Page

6.4 Mound Systems 94
6.4.1 Description 97
6.4.2 Site Considerations 97
6.4.3 Depth to Pervious Rock 97
6.4.4 Depth to High Water Table 101
6.4.5 Depth to Impermeable Soil Layer or Rock Strata 101
6.4.6 Depth to 50 Percent Volume Rock Fragments 101
6.4.7 Slopes 102
6.4.8 Special Siting Considerations 103
6.4.9 Basal Area Calculation 103
6.5 Waterless Toilets 104
6.5.1 Humus “Composting” Toilets 104
6.5.2 Chemical Toilets 104
6.5.3 Aerated Pit Latrines 105
6.6 Filtration/Reuse Systems 105
6.6.1 Recirculation Tank 106
6.6.2 Recirculation 106
6.6.3 Design Information 106
6.7 Garbage Grinders and Grinder Pumps 106
6.7.1 Garbage Grinders 108
6.7.2 Grinder Pumps 108

Section 7 LAGOON SYSTEMS
7.1 Background 109
7.2 Lagoon Applications 109
7.2.1 Facultative Lagoons 110
7.2.2 Aerated Lagoons 111
7.2.3 Aerobic Lagoons 111
7.2.4 Anaerobic Lagoons 113
7.3 Facultative Lagoon Design 113
7.3.1 Sizing Basis: Loadings for Raw Sewage .. 113
7.3.1.1 Depth 114
7.3.1.2 Design Equations 114
7.3.2 Location 114
7.3.3 Exposure 115
7.3.4 Inlets and Outlets 115
7.3.5 Construction 115

Page

7.3.6 Layout 115
7.3.7 Performance 115
7.4 Aerated Lagoon Design 115
7.4.1 Sizing Basis 116
7.4.1.1 Number of Equally Sized Basins 116
7.4.1.2 Design Conditions 116
7.4.1.3 Performance and Operating Requirements .. 116
7.4.2 Layout 123
7.4.3 Construction 123
7.4.4 Dimensions 123
7.4.5 Inlets and Outlets 123
7.4.6 Protection 123
7.5 Aerobic Lagoon Design 123
7.5.1 Sizing Basis 124
7.5.1.1 Loading 124
7.5.1.2 Depth 124
7.5.1.3 Applications 124
7.6 Anaerobic Lagoon Design 125
7.7 Lagoon Sealing 125
7.7.1 Bentonite Admixtures 126
7.7.2 Asphalt and Cement Linings 126
7.7.3 Thin Membrane Liners 126

Section 8 CHEMICAL STORAGE AND HANDLING CONSIDERATIONS
8.1 Information and Resources 128
8.2 Designer’s Checklists 128
8.2.1 Chemical Handling Checklist 128
8.2.2 Chemical Storage Checklist 129
8.2.2.1 Storage for All Chemicals 129
8.2.2.2 Storage for Dry or Containerized Chemicals 130
8.2.2.3 Storage for Liquid Chemicals 130
8.2.2.4 Storage for Liquified Gas Cylinders 130
8.2.3 Feed Equipment Checklist 131
8.2.4 Safety Checklist 131
8.3 Codes and Regulations 132

Page

Section 9 EFFLUENT DISPOSAL/RECLAMATION
9.1 Introduction 155
9.2 Surface Water Discharge Outfalls 155
9.2.1 Outfall Location 155
9.2.2 Outfall Configuration 155
9.2.3 Sizing/Capacity 156
9.2.4 Outfall Depth 156
9.2.5 Outfall Protection 156
9.3 Groundwater Recharge 157
9.3.1 Infiltration Basins 157
9.3.1.1 Applications Guidance 157
9.3.1.2 General Design Guidance 158
9.3.2 Injection Wells 158
9.3.2.1 Applications Guidance 159
9.3.2.2 General Design Guidance 159
9.3.2.3 Design Details Determined During Installation 163
9.3.2.4 Operational Considerations 164
9.4 Aquifer Storage Recovery 165
9.4.1 Applications Guidance 165
9.4.2 General Design Guidance 166

Section 10 SOLIDS CONVEYANCE AND SOLIDS PRETREATMENT
10.1 Introduction 168
10.2 Data Requirements for Design of Solids Conveyance and Pretreatment Systems 168
10.3 Piping Design 168
10.3.1 Pipe Sizing 168
10.3.2 Material Selection 168
10.3.3 Head Loss Determination 169
10.3.4 System Layout 169
10.4 Pump Selection 169
10.4.1 Centrifugal Pumps 170
10.4.2 Progressing Cavity Pumps 171
10.4.2.1 Capacity and Power Considerations 171
10.4.3 Plunger Pumps 172
10.4.3.1 Pulse Flow/Capacity Considerations 172
10.4.4 Diaphragm Pump 173
10.4.5 Rotary Lobe Pump 173

Page

10.5 Pumping System Design 173
10.6 Solids Grinding 174
10.7 Solids Screening 174
10.8 Solids Degritting 175
10.9 Solids Blending 175
10.10 Storage 176

Section 11 LABORATORY FACILITIES AND SAMPLE COLLECTION SYSTEM DESIGN
11.1 Design of Laboratory Facilities and Sample Collection Systems 177
11.2 Laboratory Facilities Planning 177
11.2.1 Design Guidance 177
11.3 Sample Collection Systems 178
11.4 Sampling Locations 178
11.4.1 Selecting Sample Locations 179
11.4.1.1 Homogeneity 179
11.4.1.2 General Characteristics of the Wastewater 179
11.4.1.3 Water Quality Degradation 179
11.4.1.4 Flow Measurement 179
11.4.1.5 Convenience 179
11.5 Type of Sample 180
11.5.1 Grab Sample 180
11.5.2 Composite Sample 180
11.5.3 Selection of Sample Type 180
11.5.3.1 Grab Samples 180
11.5.3.2 Composite Samples 183
11.6 Methods of Sample Collection 183
11.6.1 Manual Sampling 183
11.6.2 Automatic Samplers 183
11.6.2.1 Sample Intake Subsystem 185
11.6.2.2 Sample Gathering Subsystem 186
11.6.2.3 Sample Transport System 186
11.6.2.4 Sample Storage Subsystem 191
11.6.2.5 Controls and Power Subsystem 192
11.6.2.6 General Desirable Features 192
11.6.3 Installation and Use 193
11.6.3.1 General Consideration 193
11.6.3.2 Winter Operation 193
11.6.4 Selection of an Automatic Sampler 194

Page

Section 12 CORROSION CONTROL
12.1 Corrosive Environment 196
12.1.1 Underground Exposures 196
12.1.1.1 Soil Testing 197
12.1.2 Submerged Exposures 197
12.1.2.1 Concrete Structures 198
12.1.2.2 Metallic Structures 198
12.1.3 Atmospheric Exposure 198
12.2 Materials of Construction 199
12.2.1 Concrete Structures 199
12.2.2 Buildings 199
12.2.2.1 Structural Steel 200
12.2.2.2 Fasteners 200
12.2.2.3 Fabricated Metalwork 200
12.2.2.4 Handrails and Grating 201
12.2.3 Mechanical Items 201
12.2.3.1 Piping 201
12.2.3.2 Gates and Weirs 203
12.2.4 Electrical Equipment 203
12.2.4.1 Raceways 203
12.2.4.2 Switchgear and Motor Control Centers (MCCs) 203
12.2.4.3 Outdoor Enclosures and Lighting 204
12.2.5 Instruments and Control Systems 204
12.2.6 Chemical Handling Systems 204
12.2.6.1 Chlorine Gas 204
12.2.6.2 Ferric Chloride 205
12.2.6.3 Hydrogen Peroxide 205
12.2.6.4 Sodium Hydroxide and Sodium Hypochlorite 205
12.2.6.5 Concentrated Sulfuric Acid 205
12.3 Corrosion Control 207
12.3.1 Protective Coatings 207
12.3.1.1 Surface Preparation 207
12.3.1.2 Coating Systems 209
12.3.1.3 Chemical Containment 210
12.3.2 Cathodic Protection 212
12.3.2.1 Galvanic Cathodic Protection Systems 212
12.3.2.2 Impressed Current Cathodic Protection Systems 212
12.3.2.3 Design 213

Page

FIGURES

Figure 1 Pressure Manifold Schematic for Pier and Wharf Systems 44
2 Collecting Sewer Layout for Alternative Pier Types 45
3 Typical Shore Collection Facilities for Receiving Ship's Sewage 47
4 Details for Shore Collection Facilities Receiving Ship's Sewage 49
5 Piping Details for Shore Collection Facilities Receiving Ship's Sewage 52
6 Ship-to-Shore Sewage Hose Components 57
7 Aboveground Receiving Hose Connection 58
8 Typical Sewage Collection System Layouts for Drydock Facilities 61
9 Underground Receiving Hose Connections for Drydock Facilities 63
10 Decision Tree for Oil/Water Separators 68
11 Conventional Gravity Separator 72
12 Parallel Plate Separator 74
13 Dissolved Air Flotation 76
14 Activated Sludge Package Plant Installations .. 86
15 Typical Two-Compartment Septic Tank 90
16 Subsurface Absorption System 93
17 Seepage Pit Cross-Section 95
18 Leaching Field Cross-Section 96
19 Mound System—Trenches 98
20 Mound System—Beds 100
21 Filtration and Reuse Systems 107
22 Facultative Lagoon and Mechanically Aerated Lagoon 117
23 Alternative Lagoon Flow Schematics 120
24 Relationship Between Permeability and Quantity of Bentonite in Soil Mixing 127
25 Schematic of Forced Flow Type Sampler 187
26 Schematic of Suction Lift Type Sampler 188
27 Schematic of Open Channel Mechanical Sampler 189

TABLES

Page

Table 1 Non-Monetary Evaluation Criteria 16
2 Types and Origins of Wastewater at Military Facilities 26
3 Wastewater Flow Estimates for Facilities Design 31
4 Ship Sewage Discharge Rates 37
5 Typical Ship Sewage Concentrations 41
6 Chloride Inhibition of Biological Nitrification 42
7 Special Pier Structures and Appurtenances 54
8 Characteristics of Package Biological Treatment Units 85
9 Soil and Site Factors That Restrict Mound Systems 99
10 Correction Factors for Mounds on Sloping Sites 102
11 Percolation Rates and Corresponding Design Loading Rates 103
12 Wastewater Stabilization Lagoons 112
13 Facultative Lagoon Sizing Criteria 114
14 Chemical Shipping Data and Characteristics ... 132
15 Chemical-Specific Feeding Recommendations 144
16 Classifications of Injection Wells 160
17 Pump Selection 170
18 Compositing Methods 181
19 Advantages and Disadvantages of Manual and Automatic Sampling 184
20 Comparison of Sample Gathering Subsystems 190
21 Critical Soil Parameters 197
22 Materials of Construction—Chemical Handling Facilities 206
23 Steel Structures Painting Council Surface Preparation Standards 208
24 Suggested Protective Coating Systems 209
25 Concrete Protection—Chemical Containment 211

APPENDIX

Page

APPENDIX A WEF Guidance Manuals Cross Reference 215

REFERENCES 221

GLOSSARY 231

CONCLUDING MATERIAL 236

Section 1: INTRODUCTION

1.1 Scope of This Handbook. This handbook supplements the set of commercial design guidance documents adopted by the military for use in designing wastewater treatment facilities at military installations. That primary design set consists of six manuals of practice (MOPs) published by the Water Environment Federation (WEF, formerly known as the Water Pollution Control Federation). As an augmenting handbook, this guidance should be used in conjunction with those commercial manuals.

Personnel responsible for designing fixed-base wastewater treatment systems, including experienced engineering personnel within the Air Force, Army Corps of Engineers (COE), and Navy as well as contract architectural engineering (A/E) personnel, should refer to each of the six WEF MOPs and to this augmenting handbook.

1.1.1 Use and Limitations. This handbook is a process design guide and does not address general plant design. In designing and constructing any wastewater treatment facility, numerous design details need to be considered. They include water supply systems, lighting requirements, service buildings and equipment, landscaping, and proprietary processes and equipment. Requirements for these design elements are given in other military and service-specific publications.

Design personnel should also check current service policy documents for detailed instruction. Service-specific directives take precedence over information contained in this handbook. Facility fencing and security guidance is provided in MIL-HDBK-1013/1, Design Guidelines for Physical Security of Fixed Land-Based Facilities and MIL-HDBK-1013/10, Design Guidelines for Security Fencing, Gates, Barriers, and Guard Facilities."

1.1.2 Primary Design Guidance Documents. The WEF manuals are the primary technical guidance source for the design of wastewater treatment systems. The WEF set includes the following publications, several of which are published jointly with the American Society of Civil Engineers (ASCE):

a) WEF MOP 8, Design of Municipal Wastewater Treatment Plants (Volumes I & II) (ASCE Report on Engineering Practice No. 76)

b) WEF MOP FD-5, Gravity Sanitary Sewer Design and Construction (ASCE Report on Engineering Practice No. 60)

c) WEF MOP FD-4, Design of Wastewater and Stormwater Pumping Stations

d) WEF MOP FD-12, Alternative Sewer Systems

e) WEF MOP FD-6, Existing Sewer Evaluation and Rehabilitation (ASCE Report on Engineering Practice No. 62)

f) WEF MOP FD-10, Wastewater Disinfection

1.1.3 Augmenting Handbook. This handbook guides the reader on those topics that are relevant to designing wastewater treatment systems at military facilities and that are not covered in the WEF manuals. It also supplies information on topics covered in the WEF set but deserving of special emphasis. Where discrepancies occur between this handbook and the WEF manuals, the information here takes precedence and should be used.

To provide military personnel with the most up-to-date information available, this handbook points the reader to training guides, handbooks, and other documents published by authorities in the wastewater treatment design field. The most recent edition of all referenced publications are considered to be part of this handbook.

1.2 Organization of Handbook. It is suggested that the reader become familiar with the organization, content, and intended use of this handbook by first looking at the table of contents. Next, the reader may page through the manual to get an overall idea of the organization. For some topics, the reader will be guided to published sources for additional detailed information.

Appendix A provides a directory of topics related to process design. The directory, intended to serve as a cross reference for readers, lists each topic along with the WEF manual chapter and/or MIL-HDBK-1005/16 section in which it is discussed.

1.3 Cancellation. This handbook replaces MIL-HDBK-1005/8, Domestic Wastewater Control, TM 5-814-3, and AFM 88-11 Vols. 1, 2, and 3, Domestic Wastewater Treatment. MIL-HDBK-1005/8 has been inactivated, but will be available through the Construction Criteria Base (CCB) for reference on past projects. Hard copies of TM 5-814-3 and AFM 88-11 Vols. 1, 2, and 3 should be retained for reference on past projects.

Section 2: WASTEWATER TREATMENT FACILITY PLANNING AND DESIGN DEVELOPMENT

2.1 Introduction. There are a number of topics outside the detailed design of wastewater treatment systems that also must be addressed prior to design. The first two chapters of WEF MOP 8 contain general facility planning and design development guidance for such areas as project sequencing and design standards, procurement alternatives, defining objectives, and the future trends in wastewater treatment. This information is augmented in this handbook section through a discussion of the following topics:

a) A review of regulatory compliance and management issues for addressing permitting needs and defining the level of treatment required

b) Facility planning activities, including the need to conduct engineering studies prior to design to establish the need for new or modified facilities, to develop the design basis for those facilities, and to determine the most efficient alternative for achieving the objectives based on cost and non-cost criteria

c) Additional planning and budgeting activities that should be part of the design, such as the need for site-specific O&M manuals, facility startup training, and facility performance testing

d) General design guidance regarding beneficial reuse of solids, wastewater reuse, and considerations for cold climate design

Additional requirements for planning and commissioning of wastewater treatment plants are included in MIL-HDBK-353, Planning and Commissioning Wastewater Treatment Plants. MIL-HDBK-353 includes requirements for programming, including preparation of a Requirements and Management Plan (RAMP), design, construction, inspection commissioning, and performance commissioning.

2.2 Regulatory Compliance and Management

2.2.1 Federally Owned Treatment Works (FOTWs). Generally, FOTWs are operated and administered under similar permitting and operational provisions set forth for publicly owned treatment

works (POTWs). That is, these facilities comply with the construction permitting, operational permitting, and effluent discharge and residuals handling permitting requirements as administered by individual states and/or the U.S. Environmental Protection Agency (EPA).

2.2.2 Permitting Requirements. Permits are issued for the construction or modifications of FOTWs, discharge of treated effluent, discharge of stormwater runoff, and residual solids management practices. These permits can be issued by Federal (EPA), state, or local governments. Sometimes all three levels of government issue separate permits. More often, the FOTW operating permits are combined.

Managed by the EPA, the National Pollutant Discharge Elimination System (NPDES) program issues NPDES operating permits required before an FOTW can discharge any process water into waters of the state. Many states are considered to have “NPDES primacy,” meaning they are authorized to issue these permits. Typically, states with this primacy will also incorporate any unique state requirements into the NPDES permit. Some states also have their own discharge permitting program. This program requires the permittee to obtain a state discharge permit in addition to the NPDES discharge permit. Local governments may have separate requirements, so FOTW designers should check with local pollution control agencies to determine what local requirements may also pertain. FOTW designers will need to be aware of all operating permit requirements to effectively design or modify existing systems. In addition to wastewater, NPDES permits can also address stormwater and solids. Treated effluent that is entirely disposed into the groundwater does not need an NPDES permit to discharge, but it may be subject to NPDES permits for stormwater or solids. A valid NPDES permit will identify the owner, describe the process, describe the discharge location and frequency, and contain specific and general conditions.

An NPDES permit is not a construction permit. In some states, an owner may construct or modify a facility, but it is a violation to operate the modified facility until a valid operating permit is obtained. Other states limit all construction activities until the changes or modifications are approved. Any change or modification to the process should be reviewed with the permitting agency prior to implementation to determine if a permit modification is required.

2.2.2.1 Stormwater NPDES Permit. In accordance with 40 CFR 122.26, stormwater associated with industrial activities is managed under a separate stormwater NPDES program. FOTWs that treat more than 1 million gallons per day (mgd) (4 million liters per day [ML/d]) are included in the stormwater NPDES permitting program as a categorical industrial facility. Although stormwater could be included in the operating permit listed above, most facilities obtain a general stormwater NPDES permit. This permit is maintained separately from the other permit and would require special reporting or applications. Construction of wastewater treatment plants over 5 acres in area will require a stormwater construction permit.

2.2.2.2 Residual Solids Permit. FOTW residual solids management has received special attention under the Code of Federal Regulations (CFR) 40 Part 503. Solids management will typically be addressed as part of the FOTW operating permit. However, even if there is no discharge to state or Federal waters and, consequently, no discharge permit, a separate permit for the solids may still be required.

2.2.3 Permit Renewal. NPDES permits are valid for up to 5 years. Permit renewal applications must be submitted 180 days (about 6 months) before the expiration date. Ideally, preparation for the application begins about 1 year before the permit application is due. Preparation involves assessing plant performance and improvement needs and conducting the necessary planning and design required to keep the facility in compliance. Document this review in a Capacity Analysis Report and an Operation and Maintenance Report, as described below. These reports are typically prepared by licensed engineering staff. Each of these reports may take a couple of months to develop and may lead to additional work, so a 1-year lead time is not excessive.

If the permit renewal is due and the assessments are not complete, the FOTW must still apply 180 days before the deadline. Failure to apply in a timely manner is a permit violation. Changes to the permit can be applied for at any time during the permit duration. There may be an additional fee for each permit modification application. Combining requests for changes with the permit renewal application is often convenient. If the existing permit is being violated regularly, the FOTW may need to conduct the facilities planning assessments described in par. 2.5 and act before permit expiration.

2.2.4 Permit Application Forms. Contact the permitting agencies to obtain the latest forms required for permit renewal or changes. NPDES applications usually consist of a Form 1, containing general owner information, and Form 2A, containing a substantial amount of wastewater treatment plant information. These forms require historical plant operation data and much of the same information required for the Capacity Analysis Report and the Operations and Maintenance Report. The Federal government does not charge a fee, but state and local agencies may assess application-processing fees.

2.3 Governing Effluent Limitations. In planning any wastewater treatment facility, it is essential that the specific set of effluent limitations the facility will be required to meet is defined at the start of the planning process. Potential new requirements for effluent limitations should also be identified so they can be considered in the planning and design of the facility.

2.3.1 Current Trends in the Wastewater Industry That Affect Effluent Permitting. The regulatory agencies (either state and/or EPA) responsible for the issuance of discharge permits are implementing more comprehensive programs to ensure protection of the water quality standards of the state's streams. In addition, the regulatory agencies are implementing basinwide permitting programs designed to bring streams that have been identified as not currently meeting water quality standards into compliance. This program evaluates all sources of pollution (point and nonpoint sources); through the development of total maximum daily loads (TMDL) for the watershed, the program allocates allowable discharge levels from all sources within the drainage basin. This could mean that more restrictive effluent limits will be placed in discharge permits. The use of TMDL in the permitting process will be prevalent in the future. As facilities go to basinwide permitting, permit renewals may occur over a period of less than five years.

2.3.2 Water Quality Standards. Effluent limits contained in the NPDES permit are developed by the permit writer and are normally based on state water quality standards for the receiving stream. These effluent limits are called "water quality-based effluent limits." These are generally more stringent than technology-based standards. Each stream in the state is classified in the water quality standards according to its existing or potential uses. Specific and general standards apply

to each classification. These standards are then used to develop the effluent limits for the discharger.

The inclusion of water quality-based effluent limits in the permit is based on a review of the effluent characterization presented in the discharger's permit application (EPA Form 2C). This review, conducted by the permit writer, assesses the presence of compounds that could violate the water quality standards. For these compounds, permit limits will be identified wherever possible.

2.3.2.1 Waste Load Allocation. Most NPDES permits include limits on oxygen-demanding substances (such as carbonaceous biochemical oxygen demand [CBOD] and ammonia). Development of these limits is typically based on a waste load allocation for the receiving stream. Stream modeling is used to assess the assimilative capacity of the stream based on the applicable dissolved oxygen (DO) standard. This capacity is then allocated among all the dischargers in the area. Generally, some portion of the stream's capacity is reserved for future dischargers.

Waste load allocation modeling typically consists of a desktop effort for small discharges and a calibrated and verified model based on field measurements for larger discharges. Modeling can be performed by the discharger or by the state agency. Regardless of who performs the modeling, the results receive a detailed review by both the state and the EPA. Typically, these results are put out for public comment. In many cases, the public comment period is concurrent with the public notice for the NPDES permit.

2.3.2.2 Chemical-Specific Criteria. Water quality-based effluent limits can be based on chemical-specific criteria from the water quality standards (such as for metals or toxics) or on general narrative criteria. Specific criteria are used to develop effluent limits, and in many cases an allowance for dilution in the receiving stream is provided. Typically, some portion of the 7Q10 low-flow (the seven-day low stream flow projected to recur every ten years) for the receiving stream is used for dilution purposes. Background concentrations in the receiving stream must also be considered in these calculations. Where the 7Q10 low-flow is zero, the criteria will apply at the point of discharge, prior to any dilution. In these cases it may be more economical to go to zero-discharge systems, reuse, or alternate discharge points.

2.3.3 Wastewater Effluent Toxicity. Effluent limits to minimize the toxic effects of discharges on aquatic life are increasingly being added to NPDES permits. These limits can apply to specific aquatic life or can contain general criteria to limit toxicity.

2.3.3.1 Aquatic Life Criteria. For aquatic life criteria, acute or chronic values apply. The application of acute versus chronic criteria depends on a number of items, including the use classification and the available dilution in the receiving stream. Generally, if the available dilution is greater than 100 to 1, the acute criteria apply.

2.3.3.2 General Narrative Criteria. An example of a general narrative criteria follows:

> Toxic substances shall not be present in receiving waters, after mixing, in such quantities as to be toxic to human, animal, plant or aquatic life or to interfere with the normal propagation, growth and survival of the indigenous aquatic biota.

To address this narrative criteria, most states apply a whole-effluent toxicity requirement in the permit. The whole-effluent approach to toxics control for the protection of aquatic life involves the use of acute and/or chronic toxicity tests to measure the toxicity of wastewaters. The acute test assesses the lethality of the wastewater to the test organisms and is typically conducted for 96 hours or less. The chronic test assesses growth and reproduction in addition to lethality and is typically conducted over a 7-day period. Whole-effluent toxicity tests use standardized surrogate freshwater or marine plants, invertebrates, and vertebrates. The test is run at the same dilution as is allowed for the wastewater in the receiving stream. If the criteria cannot be met, a toxicity reduction evaluation of the discharge must be conducted.

2.3.4 Negotiation of Effluent Limits. Careful review by the discharger of the specific basis used for the water quality-based effluent limits is advisable. In many cases, the basis used to develop the effluent limits is open to negotiation. Potential changes to the effluent limitations should also be discussed with the regulatory agency. In many cases, future limitations may affect the initial selection and design of treatment processes.

2.3.5 Wastewater Reuse. Two general categories of wastewater management exist: wastewater disposal and wastewater reuse. Several states and communities have, for decades, been promoting the beneficial reuse of wastewater as a way of reducing both water demands and wastewater disposal to the environment. Wastewater treated to appropriate standards and reused is often referred to as reclaimed water. The most common reuse projects involve the use of reclaimed water for irrigation purposes (e.g., golf courses, residential, and commercial). Other uses of reclaimed water may include fire protection, landscape features (ponds or fountains), and industrial supply. Generally, a project is considered a reuse project only if the reclaimed water discharge enhances the environment or replaces or generates a future potable water supply. A groundwater monitoring plan is often required as part of a reuse system to demonstrate that compliance with appropriate groundwater quality standards is maintained throughout normal operation of the reuse system.

Groundwater discharge is sometimes referred to as “groundwater recharge” and may be considered reuse if it is used to replenish a freshwater aquifer. However, contamination of a potential drinking water supply may be a concern. Groundwater recharge may be in the form of slow rate infiltration (e.g., land application) or rapid rate infiltration (e.g., through injection wells or percolation ponds). Most land application projects that rely on groundwater infiltration for effluent disposal would be considered disposal projects, not reuse projects, unless it can be demonstrated that the groundwater infiltration is beneficially recharging a usable aquifer without degrading the quality of the aquifer for future potable or nonpotable uses. Rapid rate infiltration reuse projects may include banking of reclaimed water to augment future reuse systems, or saltwater intrusion barriers to protect or enhance future potable or nonpotable groundwater supplies. Deep well injection to a saltwater aquifer is not typically considered to be reuse; however, injection wells may provide an important component of a reuse system to allow for disposal of excess wet weather flows.

Any disposal to natural surface waters is considered an NPDES discharge and will be subject to all applicable rules. If this discharge is to a saltwater body, no reuse can be demonstrated. However, if the discharge is to a freshwater body that is subsequently used for indirect potable or nonpotable water supplies, such as a golf course pond, a beneficial reuse may exist as long as no water quality degradation has occurred.

2.3.6 Land Disposal. Disposal of wastewater effluent on the land may be an alternative where no acceptable surface water discharge exists or where treatment requirements for a surface water discharge would be too restrictive. No NPDES permit is required for land application, but a state permit is normally required. If land is available and land application appears to be a feasible option, treatment and disposal requirements must be coordinated with the appropriate regulatory agency. An FOTW not covered under an NPDES permit is subject to Resource Conservation Recovery Act (RCRA) regulations if it receives hazardous waste.

2.4 Design Requirements for Cold Climates. Some military installations are located in areas of extreme cold, including arctic and subarctic regions. Because extreme cold significantly affects the design and operation of wastewater facilities, special considerations are required when facilities are to be located in these conditions. Detailed information on cold weather design is presented in the technical manual TM 5-852-1/AFR 88-19, Volume 1, Arctic and Subarctic Construction General Provisions. Additional information is provided in Cold Regions Utilities Monograph, American Society of Civil Engineers, 1996.

The effects of extreme cold on wastewater facilities can be grouped into three categories:

a) Construction. Because of soil conditions such as permafrost, special considerations should be given to the construction of facilities, particularly for collections systems. Alternatives include aboveground pipelines and combined utility systems called “utilidors.”

b) Freezing. Many of the normal components of wastewater facilities, such as influent screening, grit removal, and primary treatment, are subject to freezing in extremely cold regions. These facilities will typically need to be enclosed or covered, and aboveground tanks may require insulation. Design biological processes such as lagoons and ponds to withstand the effect of ice, and use submerged aeration systems.

c) Processes. Both chemical and biological processes are negatively affected by extreme cold. Chemical reaction rates are generally slower at low temperatures, and chemical solubilities are reduced. The rates of biological reactions are also reduced greatly, which affects the sizing of biological treatment processes. In general, processes with long retention

times are required to provide adequate treatment. The biological processes that have been used most successfully in cold climates include lagoons or ponds, either facultative or aerated, activated sludge with long solids retention times, and attached growth systems. Attached growth systems such as trickling filters and rotating biological contactors should not be used unless they are adequately enclosed and protected from the cold. Suspended growth systems with short solids retention times such as conventional activated sludge should also be avoided.

In addition to the direct effects of cold on the design and operation of wastewater facilities, wastewater characteristics will generally differ from those in temperate regions. Wastewater in arctic and subarctic regions typically will be primarily domestic in nature and higher in strength than at comparable facilities in other regions.

2.5 Facilities Planning. MIL-HDBK-353 describes the planning required for precommissioning a wastewater treatment facility. The sections below describe reports to be prepared as part of the facilities planning process.

2.5.1 Capacity Analysis Report. This report documents the predicted future flows and loads within the treatment facility, and evaluates the capacity of existing unit processes to reliably treat those loads for the next permitting cycle. The historical flows and the treatment performance of the previous 5 years need to be analyzed. The CBOD and total suspended solids (TSS) loading (in pounds per day) also need to be verified. Population and flow and load projections are then made to estimate future loads, based on projected growth from changing or expanding missions. The capacity of each unit process needs to be determined. Note that these capacity assessments may already have been done for past renewals. However, the capacity rating of each process needs to be checked against the latest loadings and flow. Reliability and backup provisions must also be adequate.

Finally, an assessment of the future 5-year flow and loads needs to be conducted. If the plant is undersized, an expansion needs to be initiated and a Preliminary Engineering Report for improvements developed. Higher discharge loads will also precipitate additional permit application requirements to address antidegradation issues. Modeling of the effluent may be required to evaluate the impact of the discharge on the water quality of the receiving stream and to develop appropriate

effluent limits for the discharge. These limits would have to be incorporated into the state's 208 Water Quality Management Plan.

2.5.2 Operation and Maintenance Report. This report reviews plant operations data over the last permit cycle to evaluate needed improvements to the facility. Any upsets or spills need to be reviewed to determine the cause and possible solution. Some water quality exceedances may be a result of operation practices and need to be reviewed. The condition of the facilities, such as the need for painting and other routine maintenance, is evaluated. Some needs may require changes to the process or construction approval. Permit renewal is a good time to include major changes. However, not every maintenance item needs to be reported to the agencies. Confirmation from the agency on which items need permitting is recommended after the Operation and Maintenance Report is completed.

2.6 Programming. MIL-HDBK-353 describes programming requirements for planning and commissioning wastewater facilities. A RAMP must be finalized prior to designing a project. ETL 95-2, Preparation of Requirements and Management Plan Packages for Military Construction (MILCON) Program Projects, provides guidance on preparation of RAMP packages.

2.7 Preliminary Engineering Report. After a RAMP is finalized, a Preliminary Engineering Report should be prepared. This report should be prepared as part of the programming phase and before design initiation. The Preliminary Engineering Report will outline what changes are required to attain or maintain compliance. Typically, this report will contain a summary of the future flows and loads to be treated (from the Capacity Analysis Report), a review of any alternative evaluations used to select the appropriate treatment technologies, and a conceptual-level design for upgraded facilities. A professional engineer sizes and plans for appropriate process changes. The Preliminary Engineering Report is sometimes submitted as part of the construction permit application. Some states may require final construction drawings before approving the changes, while others may issue a construction permit based solely on the Preliminary Engineering Report. The Preliminary Engineering Report should include, as a minimum, the information discussed in the following subparagraphs.

2.7.1 Design Basis. Present the design basis for the proposed wastewater facilities, including the following:

a) Service Area Description. Define the area and users to be served by the proposed facilities. Any known users that are to be excluded from the service area or that will require pretreatment prior to discharge to the wastewater facilities should be identified.

b) Projected Flows and Loads. Summarize wastewater flows and loads to be handled by the proposed facilities in accordance with Section 3 of this handbook and as defined in the par. 2.5.1, Capacity Analysis Report. Identify major industrial and other significant discharges, such as ship holding tank discharges. In general, provide flows in 5-year increments over the planning period for the facilities. A 20-year plan should normally be used for evaluating wastewater facilities.

c) Effluent Requirements. Provide tentative effluent limitations based on review of regulatory requirements and discussions with the governing regulatory agency. Potential future changes to the effluent limitations should also be discussed.

d) Residuals Solids Handling Requirements. Provide anticipated disposal methods for residual solids and associated regulatory requirements. Methods may include current practices such as landfilling and land application.

e) Other Regulatory Requirements. Identify other regulatory requirements that may affect the facility’s evaluation and design, including reliability requirements, air pollution standards, noise ordinances, and hazardous material storage and handling requirements.

2.7.2 Alternatives Evaluations. In general, alternatives evaluations should be performed to determine the facility configuration and processes that will most cost effectively meet the requirements identified in the design basis. In some cases, if a facility is being expanded and it is designed for expansion using the same processes, only limited evaluations may be required (such as alternative equipment selections). However, if an analysis to determine cost effectiveness is not performed, the basis for selecting the proposed facilities should still be documented.

Evaluate alternatives for liquid treatment processes to meet effluent limitations and solids treatment processes for handling and disposing of residuals. When evaluating liquids treatment processes, consider how the processes will affect the

quantity and characteristics of residuals. In addition, recycle flows from solids handling and treatment processes can significantly affect liquids treatment processes and should be evaluated.

As an alternative to new or modified facilities, consider tying into existing POTWs by evaluating life-cycle costs. Consult service policies on tie-in criteria. In general, alternatives should be evaluated using a cost analysis that considers both life-cycle costs and other non-monetary evaluation criteria.

2.7.2.1 Life-Cycle Costs Evaluation. Evaluate alternative wastewater processes and facility configurations using order-of-magnitude costs and a life-cycle cost evaluation, which includes the following:

a) Capital costs, including construction costs and associated legal, engineering, and administrative costs

b) Annual O&M (operation and maintenance) costs estimated for the planning period of the project, usually 20 years

c) Replacement costs for equipment and facilities during the planning period

d) Salvage value and demolition or decommissioning costs for facilities at the end of the planning period

e) Total present-worth costs or other comparative costs in present-day dollars for Items a through d

Capital costs, annual O&M costs, and total present-worth costs should be presented for each alternative.

2.7.2.2 Non-Monetary Evaluation. Alternatives should also be evaluated using non-monetary criteria, which should be established with input from key personnel responsible for the construction and operation of the proposed facilities. Table 1 presents several non-monetary evaluation criteria.

Evaluation using non-monetary evaluation criteria is largely subjective and, therefore, should be done with the participation of key personnel. If desired, non-monetary criteria can be weighted, and each alternative can be ranked for

each criterion. A total non-monetary ranking can then be established for each alternative.

2.7.2.3 Alternatives Selection. Select alternatives based on the lowest total present-worth costs unless there are overriding non-monetary factors. If alternative costs are comparable, use the non-monetary criteria to select the best alternative.

Table 1
Non-Monetary Evaluation Criteria

Criteria	Comments
Operability	
Ease of operation	Minimizes operator attention/expertise required to ensure successful process performance
Ease of maintenance	Maintenance requirements not excessive and do not require special expertise; facilities and equipment readily accessible
Operator familiarity	Staff familiarity and ability to use staff experience from existing facilities

Table 1 (Continued)
Non-Monetary Evaluation Criteria

Criteria	Comments
Reliability	
Demonstrated performance	Proven process/technology to meet permit limits reliably
Hydraulic sensitivity	Capability to handle variations in hydraulic loads with minimal process impacts
Waste loading sensitivity	Capability to handle variations in waste loads with minimal process impacts
Process control stability	Not subject to upset from inadvertent operational changes, toxic slugs
Flexibility	Capability for changes in process operations to handle differing waste load conditions and to meet differing treatment objectives for different effluent requirements
Environmental Effects	
Odor	Minimizes potential for odors
Noise	Minimizes potential for noise
Visual impacts	Minimizes negative visual impact of facility
Effects on floodplain	Minimizes changes to floodplain
Effects on wetlands	Minimizes changes to wetlands
Footprint	Minimizes footprint and disruption to site, including removal of trees, etc.
Expandability	
Footprint	Maximizes area available for expansion
Flexibility	Easily modified to meet differing future loads, effluent requirements, and/or treatment objectives

2.7.3 Recommended Plan. Describe the recommended plan for the wastewater facilities based on the alternatives evaluation. This will consist of a conceptual design for the recommended plan and should include the following:

a) Process design criteria and preliminary sizing of process facilities and equipment

b) Preliminary hydraulic profile based on the peak design flow

c) Preliminary mass balance for plant showing process performance and residuals production based on design loadings

d) Site layout showing location of major facilities

e) Preliminary layouts for major process facilities

f) Overall electrical feed and distribution plan

g) Overall instrumentation and control plan indicating the type of system proposed and major process control and monitoring functions

h) Specific provisions to meet other regulatory requirements such as stormwater drainage and treatment

2.7.4 Beneficial Reuse of Solids. Consider beneficial reuse when evaluating alternatives for the disposal of residual solids from wastewater facilities. Stabilized solids from biological treatment processes are commonly applied to agricultural land, where they can improve crop production. Biological solids can also be further treated by composting or other processes to produce material that is acceptable for public use for horticultural and landscaping purposes. Industrial wastes such as heavy metals can limit the feasibility of beneficial reuse, which is one reason for eliminating, reducing, or pretreating industrial wastewaters prior to their discharge to the FOTW.

The disposal of residual solids is regulated by 40 CFR Part 503. This regulation specifies the treatment and disposal requirements for beneficial reuse of residual solids. There are two general types of solids, Class A and Class B, which are classified based on the level of solids treatment provided and

the characteristics of the solids. Class A and B solids can be applied in bulk form to agricultural land, forests, or reclamation sites. Class A solids can also be applied in bulk form to lawns or gardens, or sold or given away in bags or other containers.

For additional information on the Part 503 regulations, refer to EPA/G25/R-92-013, Environmental Regulations and Technology: Control of Pathogens and Vector Attraction in Sewage Sludge (Including Domestic Sewage) Under 40 CFR Part 503.

2.8 O&M Manuals. Every wastewater facility should have a site-specific, up-to-date O&M manual to provide guidance to the facilities staff. Regulators generally require these manuals; see MIL-HDBK-353 for additional requirements. As part of any wastewater facilities construction or expansion project, prepare a new manual or update or supplement the existing manual to include the new facilities. O&M manuals will generally consist of two major parts: the operations manual, which is normally prepared by the designer of the facilities, and a maintenance manual, which includes the equipment manufacturer's recommendations and procedures for maintenance.

2.8.1 Operations Manual. The operations portion of the O&M manual should normally be prepared by the design engineer. The operations manual should include the following:

a) Plant design basis, including design flows and loads, hydraulic profile, mass balance, and effluent limitations. Include all current permit requirements.

b) Overall description of each process, its purpose, and configuration.

c) Process data summary presenting process design criteria, basin/tank sizes, and equipment type, size capacity, horsepower, speed, and manufacturer.

d) Process schematics showing all normal and alternative flow paths, valving, and instrumentation and controls.

e) Operating procedures, including process startup, shutdown, normal operations, and emergency operations, if applicable.

f) Instrumentation and control system description, including locations and functions of all operator interfaces.

g) Process control procedures, including required testing and calculations necessary to monitor and control process. Identify potential operational problems, causes, and corrective procedures.

h) Unless included elsewhere, sampling and laboratory procedures and requirements for recordkeeping.

i) Unless included elsewhere, safety procedures including those for storage and handling of any hazardous materials used on site, electrical hazards, confined space entry, and all other applicable safety-related topics.

2.8.2 Maintenance Manual. The maintenance manual portion of the O&M manual primarily provides information on procedures for maintaining, troubleshooting, and repairing facility equipment. This information should be provided by the equipment manufacturers as part of the construction contract, which should specify the minimum information required. The contractor should be required to compile the maintenance information into a single manual for the facility. Maintenance manuals should cover equipment, controls, accessories, components (e.g., motors, speed reducers), and appurtenances. MIL-HDBK-353 defines requirements for maintenance manuals. Manuals should include the following information:

a) Diagrams and illustrations.

b) Detailed description of the function of each principal component of any system.

c) Performance and nameplate data of each component.

d) Name, address, and telephone numbers of the following: manufacturer, manufacturer's local representative, nearest parts supply house, and nearest repair service.

e) Installation instructions.

f) Procedure for starting.

g) Proper adjustment.

h) Test procedures and results of factory tests where required.

i) Procedure for operating, including both individual components and the entire system (where the manual is for a system).

j) Shutdown instructions for both short and extended durations.

k) Emergency operating instructions.

l) Troubleshooting guide including common problems, symptoms, causes, and remedies.

m) Safety precautions.

n) Maintenance and overhaul instructions, illustrated with detailed assembly drawings clearly showing each part with part numbers and sequentially numbered parts list. Include instructions for ordering spare parts as well as complete preventive maintenance and overhaul instructions required to ensure satisfactory performance and longevity of equipment.

o) A current, dated, complete price list.

p) Lubrication instructions and diagrams showing points to be greased or oiled; recommended type, grade, quantity, and temperature range of lubricants; and frequency of lubrication, including the identification of the appropriate lubricant(s).

q) List of electrical relay settings and control and alarm contact settings.

r) Electrical interconnection wiring diagram for equipment furnished, including all control and lighting systems.

s) Electrical control diagrams.

t) Results of performance tests.

u) Copies of all warranties/guarantees, with warranty start date(s).

v) List of recommended spare parts, including the recommended quantity for the total number of pieces of equipment supplied for the project.

w) List of spare parts and special tools provided for the project and the retail value of same.

x) Maintenance summary form as specified in par. 2.8.3.

2.8.3 Maintenance Summary Forms. A summary of critical maintenance information should be provided for all equipment. Provide this information on a standard form that is readily usable. Maintenance summary forms also can be used as a data input form for computerized maintenance management systems. The following elements make up a typical maintenance summary form:

a) O&M identification numbers

b) Equipment item name

c) Equipment identification number

d) Manufacturer

e) Weight of individual components (over 100 pounds)

f) Nameplate data (hp, voltage, speed, etc.)

g) Name, address, and telephone number of the manufacturer's local representative

h) A list of maintenance requirements specifying each required maintenance operation (refer to manufacturer's maintenance manual, if applicable); the frequency of each maintenance operation; any lubricants, if applicable; and pertinent comments

i) A list of several equivalent lubricants, as distributed by each manufacturer for the specific use recommended, for each of the lubricants listed in the maintenance requirements

j) A recommendation of the type and number of spare parts that should be kept in stock

2.9 Startup Training. Training of facility staff is necessary before new wastewater facilities are started up. Depending on the experience of the staff, and their familiarity with the proposed facilities, training should include the following:

a) Equipment O&M Training. This training should be provided by the equipment manufacturer, normally as part of the construction contract. It should include all procedures described in the O&M manuals provided by the manufacturer.

b) Process Training. Where new or unique treatment processes are being constructed, operations staff should be trained on the basic principles necessary for adequate process control. For example, if a new biological nutrient removal process is being constructed, staff should be given training on the basic microbiological reactions that occur to produce nutrient removal as well as the process monitoring and operations necessary to control the process.

c) Operating Procedures. Review the operating procedures for all processes, including startup, shutdown, normal, and emergency procedures, if any. Include both classroom training and hands-on training where the operators can see which valves to operate, which control panels to monitor, etc. Include operator interface with the instrumentation and control system.

d) Safety Procedures. Review safety procedures for all new facilities based on existing procedures. Identify potential hazardous areas, such as confined spaces and hazardous chemical storage areas, and review safety procedures. Locate safety devices, such as safety showers, first-aid equipment, emergency repair kits, and self-contained breathing apparatus, and review procedures for their use.

e) Sampling and Testing Procedures. Review new requirements for sampling and testing within the facility.

2.10 Performance Testing. New facilities should be tested for acceptable performance both before and after startup. To the extent possible, the following testing should be performed before beginning treatment of wastewater. Written documentation should be prepared for all performance testing, which should include the following checks:

a) Equipment Performance Testing. Check all equipment for proper installation, alignment, smooth operation, non-excessive power draw, etc. Conduct tests to confirm equipment performance as specified in contract documents. For example, for pumps, use clean water, pump under design conditions and confirm that flow rate, operating pressures, and power draw meet specified requirements.

b) Instrumentation and Controls. Confirm that all instrumentation and controls operate as specified, including monitoring, control, and alarm functions. Simulate alarm conditions and verify control set points.

c) System Performance. Operate systems and confirm that all components, interlocks, controls, and the overall system perform as specified.

After startup of the facility, review the performance of the facilities according to the facility design. To the extent possible, unit processes should be loaded to design conditions to determine that they are performing adequately. For example, if initial flows are one-half the design flow, one-half the facilities should be used to simulate design conditions. In addition, to confirm that plant effluent limitations are reliably met, evaluate unit process efficiencies such as the efficiency of aeration systems, chemical usage rates, dewatered solids concentrations, and other process performance components that will significantly affect operation and maintenance costs.

Section 3: WASTEWATER FLOW RATES AND CHARACTERISTICS

3.1 Introduction. Estimating wastewater flow rates and characteristics is an essential step in the design of wastewater facilities. If the wastewater to be treated exists, take flow measurements and test the wastewater. If the wastewater to be treated is not existing, or if significant increases in the wastewater flows are projected, estimate flows and characteristics by using data from similar facilities or from the information provided here and in WEF MOP 8 (Volumes I and II) and WEF MOP FD-5.

In addition to conventional domestic wastewater, there is a small component of industrial wastewater discharges unique to military installations, including ship discharges and certain industrial flows such as vehicle/aircraft wash facility wastewater. Also, because of the unique nature of military operations, which can vary considerably and may be intermittent, wastewater flows will exhibit significant variations that must be considered in the design of wastewater collection and treatment facilities.

3.2 Wastewater Sources and Characteristics. Table 2 shows the typical major components of wastewater carried by sanitary sewers at military installations.

3.2.1 Domestic Wastewater Flow. Domestic wastewater is a typical component of wastewater, both military and nonmilitary. As indicated above, domestic wastewater is the normal wastewater produced by the domestic activities of people (i.e., flows from toilets, urinals, showers, sinks, washing machines, dishwashers, etc.). Sources of these flows will include both residential populations that are housed at military installations and personnel or employees who only work at the installation. In addition, the resident or work population may increase periodically or intermittently because of the nature of the military installation.

3.2.2 Infiltration and Inflow. Infiltration and inflow (I/I) is the extraneous water from either groundwater or surface water runoff sources which enters the collection system and becomes a component of the wastewater flow and which is conveyed and treated at the wastewater treatment facility. Depending on the

condition of the sewer system, these flows can have a major impact on peak flows and wastewater facility sizing.

Table 2
Types and Origins of Wastewater at Military Facilities

Type	Origin
Domestic flow	Homes, schools, hospitals, dining facilities, recreation and entertainment facilities, clubs, commercial stores, laundry facilities, barracks, offices, and sanitary flow from shops and industrial facilities
Infiltration	Leakage of groundwater into sewers through joints, manholes, foundation drains, and damaged or defective sewer pipes
Inflow	Leakage of surface drainage into sewers through manhole covers, roof drains, and other surface drainage connections
Industrial flow	Process wastes from facilities such as shipyards, air stations, rework/rebuild facilities, shops (paint, metal plating, etc.), industrial laundries, laboratories, and vehicle maintenance and washing facilities
Ship discharge	Holding tanks on ships

In some instances, repairing or replacing collection system components, primarily to eliminate or reduce inflow, may be cost effective. Reducing I/I will reduce both the construction costs and the O&M costs for wastewater facilities. However, sewer rehabilitation projects have often reduced I/I less than projected, often because rehabilitating a portion of a system results in increased I/I at other locations. Therefore, conservative estimates of potential I/I reduction should be used when determining if a rehabilitation project is feasible. WEF MOP FD-6 describes the methodologies for evaluating sewer system

I/I and potential alternatives for rehabilitating systems with excessive I/I.

3.2.3 Industrial Wastewater. Depending on the specific activities at a military installation, there may be sources of industrial wastewater that must be treated. Some industrial activities produce wastewater that contains high concentrations of toxic and hazardous pollutants such as heavy metals; there pollutants may not be readily treated by the conventional treatment processes used for domestic wastewater treatment. Pollution prevention programs are being implemented to minimize or eliminate these waste streams. Even with these programs, some industrial processes will still require either a separate treatment facility or some form of pretreatment before the wastewater is discharged to the sanitary sewer system. When industrial flows are significant, bench-scale or pilot-scale treatment evaluations may be required to determine the best method of treatment.

Additional information on industrial processes, their wastewater characteristics, industrial discharges typical in military installations, and alternative treatment methods are provided in TM 5-814-8, Evaluation Criteria Guide for Water Pollution, MIL-HDBK-1005/9, Industrial and Oily Wastewater Control, and MIL-HDBK-1005/17, Industrial Pretreatment Design and Nondomestic Wastewater Control Handbook.

3.2.3.1 Vehicle and Aircraft Maintenance and Wash Facilities. Washing is often performed with detergents and corrosion inhibitors, using brushing and high-pressure water rinses. Wastewaters from vehicle and aircraft maintenance and wash facilities can be a significant component of wastewaters at military installations. A typical component of these wastewaters that may impact wastewater facilities is oily waste. Oily wastes can be caused by spills of various vehicle oils into building drains or by washing oily wastes from vehicles or aircraft. In addition to oily wastes, wastewaters from vehicle wash facilities may contain large quantities of suspended solids. The suspended solids in this wastewater are generally heavier than typical domestic wastewater solids and, as a result, will tend to settle out in the collection system.

To minimize the potential impacts of oily wastes and solids from maintenance facilities, the following actions should be considered:

a) Eliminate nonessential floor drains in maintenance bays by plugging them.

b) Implement oil use and recovery plans.

c) For spill cleanup, use dry absorbents and dispose of as solid waste.

d) If necessary, route drains through an oil/water separator prior to discharge to the sanitary sewer.

e) Segregate waste streams and recover wastes where possible.

f) Where approved, implement the use of nonpersistent emulsifying degreasers, which should help minimize emulsified oils. In addition, substitute degreasers with hot water/high-pressure washers where applicable. Consider end-use of pressure washer (aircraft, vehicle) to determine maximum allowable pressure.

g) Where significant quantities of suspended solids are expected, provide pretreatment to remove suspended solids.

h) In some cases, washrack wastewater reuse may be an option and should be considered.

3.2.3.2 Additional Resources. Proper design and operation of oil/water separators is essential to the successful handling of wastewaters from vehicle and aircraft maintenance and wash facilities. Further information on oily wastewaters and the design of oil/water separators is included in Section 5 of this handbook, in MIL-HDBK-1005/9, and in MIL-HDBK-1138, Wastewater Treatment System Operations and Maintenance Augmenting Handbook.

Additional information on wastewater discharges and treatment for tactical vehicle wash facilities is included in TM 5-814-9, Central Vehicle Wash Facilities.

3.2.3.3 Closed-Loop Recycling. Closed-loop recycling may be another option to manage wastewater from vehicle and aircraft maintenance and wash facilities. There are advantages and disadvantages associated with closed loop recycling systems.

a) Advantages of these systems include the following:

(1) Usually, recycling units are above ground systems which reduce the risk of undetected leaks in below-ground oil/ water separators.

(2) To further enhance the treatment and recycling process, some systems are equipped with chemical monitoring and injection systems for introducing coagulants and other chemicals. This reduces oil and grease in the blowdown from these systems.

(3) Most of the water recycled through the unit is used over and over again, reducing the cost of fresh water required and producing less wastewater that needs to be conveyed for treatment to a separate facility.

(4) Wash water reuse conserves fresh cleaning solution because the majority of the cleaning solution is recycled with the wastewater. This recycling cuts costs.

(5) The costs associated with permit application fees, annual permit renewal fees, and associated sampling are avoided.

(6) The system reduces the risk of contaminating the environment because there is little or no discharge with this system.

b) Some disadvantages of these systems that should be considered when evaluating their use include the following:

(1) Recycling units require routine maintenance to ensure proper operating efficiency.

(2) Although recycling units greatly reduce the quantity of waste effluent, they usually do not eliminate it. These systems often produce a more concentrated waste that may require special management and disposal requirements. The operator of the unit will need to characterize this waste sludge stream to see if it is hazardous. In addition, some units routinely blow down a small fraction of the process water to the sewer which is then made up with fresh water.

(3) Training on proper use is imperative. Personnel must be assigned responsibility and be available for proper operation and maintenance of the unit.

(4) Security and weather protection may become a factor if the machine is exposed to harsh environments. Also, the machine should be secured in some manner when not in use to prevent unauthorized access and possible damage to the machine.

(5) Closed-loop recycling may not be the most economical solution. In addition to capital costs, significant O&M costs can be associated with these systems. Therefore, life cycle cost analysis should be used for comparison with other systems. Generally, it is more cost-effective to implement pollution prevention measures, pretreat, or directly discharge the wastewater to a sanitary sewer. Therefore, when considering the use of a closed-loop system, use the following criteria:

(a) If a sanitary sewer is nearby, it probably will not be cost-effective to implement a closed-loop system.

(b) If a washrack is already connected to the sewer but is having difficulty meeting the discharge requirements, or if the permit monitoring requirements are too expensive, implementing a closed-loop system may be economical. However, before pursuing a closed-loop system, the designer should evaluate methods of pollution prevention that would meet the discharge requirements.

(c) Finally, if water conservation is an issue or if an activity is given financial incentive that will offset the cost of a system, using a closed-loop system could be cost-effective.

3.2.4 Ship Holding Tank Discharges. Ship holding tank discharges can be a major source of wastewater at military installations with naval facilities. These wastewaters typically have the following general characteristics:

a) Primarily domestic wastewater but may also contain industrial wastewater depending on the ship operations

b) More concentrated than typical domestic wastewater because of how on-ship wastewater collection systems are designed

c) May contain high concentrations of dissolved solids, chloride, sulfates, and sodium if seawater flushing or ballast systems are used

3.3 Quantifying Wastewater Flows and Loads—Design Basis Development. Wastewater facilities cannot be designed without defining the wastewater flows and pollutant loads that the facilities will need to collect and treat. It is important to base the design flows and loads on measurement of actual flows and loads for the wastewaters to be treated. If you are unable to collect flow and load data, base the estimates on information about similar wastewaters or on the information included here and in WEF MOPs FD-4, FD-5, and MOP 8 (Volume I).

3.3.1 Wastewater Flow Estimate Terminology. Estimate average, minimum, and maximum wastewater flows for proper design of wastewater facilities. Table 3 lists the flow rates typically used in wastewater facilities design.

Table 3
Wastewater Flow Estimates for Facilities Design

Flow Type	Description	Design Use
Annual average daily flow	Annual average of daily flows	Estimate of annual operating costs (chemicals, power, etc.)
Maximum month flow	Highest monthly average daily flow	Design of most unit processes including biological processes
Maximum daily flow	Highest 24-hour flow in a year	Design of certain process units (such as settling tanks)
Minimum flow	Least instantaneous flow	Design of sewers and plant conduits to avoid deposition problems at low flows
Peak flow	Highest instantaneous flow	Design of sewers and hydraulic elements of treatment plant (such as pipes, pumps, weirs, and channels)

3.3.2 Flow Estimating Methodology. A general approach to estimating flow is as follows:

a) Determine average unit flows from analyses of wastewater discharged from the facilities being studied. The average unit flow is the average wastewater flow rate per unit of wastewater source. For example, for residential flows, determine the average flow per capita. For industrial flows, determine the average flow per unit of activity (for example, average flow per vehicle washed for a vehicle wash facility). To estimate future peak and minimum flows, use existing peak to average and minimum to average flow ratios to calculate these flows. Where measurements cannot be obtained, use data given in WEF MOPs FD-4, FD-5, and this section for individual flow components.

b) Apply average unit flows to design population, production, or other applicable parameter of installation size.

c) Calculate minimum and peak flows for each wastewater source by applying the appropriate flow ratios to the calculated average flows. Add maximum coincident flows from different sources to determine total peak flow. Consider peak discharges from pumping stations to be coincident with peak flows in the receiving system unless a program of pumping is used to ensure that peaks do not coincide. For example, a pump station equipped with flow-paced variable speed pumps can minimize the peak flows conveyed to the downstream receiving system. In this situation, the average flows from the system area upstream of the pump station may be combined with downstream areas and the peak calculated from the combined average flow of the two areas.

d) Estimate average wastewater flows, and peak and minimum flows for minimum, normal, and maximum deployment conditions.

3.3.2.1 Design Populations. If wastewaters are not existing and domestic wastewater flows need to be projected, estimate both resident and nonresident design populations. Complete these estimates both for initial design conditions and for projected populations to be served by the wastewater facilities, based on planned expansions or staff increases at the military installation.

Determine the design resident population estimate by adding the existing and proposed resident military populations

and their resident dependents. This should include hospital in-patient personnel. Estimate nonresident population by adding existing and proposed nonresident populations, which can include the following people:

a) Non-resident military, calculated by subtracting the resident military from the total military strength

b) Civilian personnel under Civil Service or nonappropriated funds (NAF)

c) Personnel from other services, foreign military, or nonmilitary tenant organizations

d) Contractor personnel (for example, base maintenance and custodial)

e) Daytime schools

f) Daytime transients

3.3.2.2 Domestic Flows, Annual Average. If no wastewater flow data exist to determine per capita unit flow factors, calculate domestic flows as follows:

For estimating flow, use:

Resident population	=	100-120 gallons per capita per day (gpcd) (378-454 liters per capita per day (Lpcd))
Nonresident population	=	30-35 gpcd (114-132 Lpcd)

3.3.2.3 Domestic Flows, Maximum Daily Flow. To determine the maximum 24-hour flow, use the following procedure:

a) Multiply the annual average flow by the ratio of maximum daily flow to annual average flow based on wastewater flow data for the facilities being studied. If no data are available, see Chapter 3 in WEF MOP FD-5 for methods of estimating typical domestic wastewater ratios in various geographical regions. Designers are cautioned to carefully consider the impact of resident and non-resident populations and

I/I at installations before resorting to use of the data and nomographs offered in WEF MOP FD-5. The guidance provided in WEF MOP FD-5 is based on municipally derived empirical data for flow situations in which dry-weather wastewater flow ratios are expected to govern. These relationships may not be appropriate for installations with significant non-resident populations and/or severe I/I problems.

b) Add the maximum 24-hour flows from any other sources.

3.3.2.4 Domestic Flow, Peak Flow. To determine the peak flow for a resident population, multiply the annual average flow by the ratio of peak flow to annual average flow based on wastewater flow data for the facilities being studied. If no data are available, see Chapter 3 in WEF MOP FD-5 for methods of estimating ratios for typical domestic wastewater. Designers are cautioned to carefully consider the impact of resident and non-resident populations and I/I at installations before resorting to use of the data and nomographs offered in WEF MOP FD-5. The guidance provided in WEF MOP FD-5 is based on municipally derived empirical data for flow situations in which dry-weather wastewater flow ratios are expected to govern. These relationships may not be appropriate for installations with significant non-resident populations and/or severe I/I problems. In these situations, careful consideration and allowance for I/I flows must be made when developing peak design flow rates.

Consider coincident peaks from other sources. For a nonresident population, assume that a peak flow of three times the average nonresidential flow is coincident with resident peak flow (i.e., daily contribution uniform over 8-hour shift). For installations where the average domestic flow for nonresident population will exceed 0.4 mgd (1.5 ML/d) or constitute more than 20 percent of the total average flow, investigate flow variations from nonresidents in the installation itself or at an installation similar to the one proposed. Note that peak flows can vary widely at specific installations. At Hurlburt Field it was found that residential population flows had a peaking factor of 3, while base operations had a peaking factor of approximately 7. This illustrates the need to accurately evaluate and account for peak flows from all sources, such as flows from vehicle and aircraft washing facilities and other industrial flows that occur during specific hours. If these flows coincide with peak domestic flows, they should be added to the peak flows.

3.3.2.5 Domestic Flows, Minimum Flow. To determine the minimum flow for resident population, multiply the annual average flow by the ratio of minimum flow to annual average flow based on wastewater flow data for the facilities being studied. If no data are available, see WEF MOP FD-5. For nonresident populations, assume the minimum flow is zero.

3.3.2.6 Infiltration. A typical allowance for infiltration is included in the per capita flows of domestic wastewater. This allowance is 500 gallons per day per inch diameter mile (gpd/in.-mi) (46 liters per day per millimeter diameter kilometer [Lpd/mm-km]) of sewer. For existing systems, estimate infiltration by comparing the measured wastewater flow with water use. Also, check variations of flow with weather conditions. Refer to WEF MOPs FD-5 and FD-6.

3.3.2.7 Inflow. Surface drainage or runoff is normally very large in relation to sanitary flow. Surface drainage or inflow should be kept out of sanitary sewers by rational design procedures, adequate construction specifications and inspection, and enforced regulation. Manhole covers can be a large source of inflow. In areas subject to overflow by surface drainage, the problem can be reduced significantly by using solid covers with half-depth pickholes. Using bolted and gasketed manhole covers in areas subject to flooding can also reduce the problem.

Existing sewer systems should be evaluated for inflow by the designer of new intercepting sewers, trunk sewers, collector sewers, or treatment facilities fed by the existing sewers. If inflow is significant, sources should be determined by inspecting manhole covers, roof and other drainage connections, smoke testing, and internal televised inspection of sewers. All inflow that is cost-effective to remove should be eliminated by rehabilitating the sewer system to prevent oversizing of new sewers and wastewater treatment facilities. Refer to WEF MOP FD-6.

3.3.2.8 Industrial Flows. Industrial flows will vary based on the nature of the activity and should be estimated on a site-specific basis. If flow data for the wastewater to be treated are unavailable, base the estimate on similar existing activities. For additional information on industrial wastewater flows, refer to WEF MOP FD-5, MIL-HDBK-1005/9, and MIL-HDBK-1005/17.

3.3.2.9 Ship Discharges. Table 4 lists the maximum ship's complement, daily flow, maximum discharge, number of pumping stations, total number of pumps, and number and location of discharge connections for selected ship types. Where destroyers or submarines are nested next to a tender, and the tender is berthed at a pier, the nested ships will discharge into the tender and the tender will discharge to the pier at the rate listed for the tender.

In designing pier sewage collection systems to receive sewage from ships, include facilities to meter the total flow through the collection system. Consult the activity's Public Works Department for metering needs. The location of meters necessary to provide the needed information will be determined by the layout of the collection system, but in no case should this exceed one flow measurement meter at the shore end of each pier. It is not necessary to meter the flow from individual ships.

3.3.2.10 Flow Rate Variations. Domestic wastewater flows on military installations can be expected to exhibit seasonal and other weather-influenced flow variations. In addition, the effect of industrial and ship discharge flows as well as the variable nature of military operations may significantly affect flow variations. To minimize flow variations, flow equalization should be considered. Equalization can be applied to specific industrial or other flows which exhibit wide variations, or to the entire wastewater flow. When estimating flows, consider the following:

a) Industrial flows such as vehicle and aircraft wash facilities that occur during specific hours. If these flows coincide with peak domestic flows, they should be added to the peak flows.

b) Ship holding tank discharge flows. Flow rates will depend on the total volume of flow to be handled and the time required to convey the wastewater to the treatment facility. Design equalization systems to equalize the flows so as to minimize their effects on peak flows and loads. Conveying ship wastewaters to the treatment facility at night when domestic flows and loads are low will further reduce their impact.

Table 4
Ship Sewage Discharge Rates[1]

Ship Type[2]	Maximum Ship's Complement	Average 24-Hour Flow[3] (gpm [L/s])	Maximum Discharge of One Pump (gpm [L/s])	No. of Pumping Stations	Total Number of Pumps	Number and Location of Discharge Connections[4]
AD 37, 38	1350 1680 + 340 = 2020	85 (5.4)	225 (14.2)	4	8	2 (1P, 1S)
AD 40, 41, 43	1680 + 340 = 2020	85 (5.4)	225 (14.2)	5	10	3 (1P, 1S, 1A)
AD 44	1680 + 340 = 2020	85 (5.4)	225 (14.2)	3	6	2 (1P, 1S)
AE	383	20 (1.3)	150 (9.46)	1	2	2 (1P, 1S)
AGF	440	20 (1.3)	150 (9.46)	3	6	2 (1P, 1S)
AO	225	10 (0.6)	100 (6.31)	1	2	2 (1P, 1S)
AOE	667	30 (1.9)	100 (6.31)	2	4	2 (1P, 1S)
ARS	100	5 (0.3)	100 (6.31)	1	2	2 (1P, 1S)
AS 33	915	40 (2.5)	100 (6.31)	3	6	1 (1A)
AS 36	915	40 (2.5)	100 (6.31)	3	6	1 (1A)
AS 39	915	40 (2.5)	100 (6.31)	5	10	3 (1P, 1S, 1A)
CG	358	15 (1.0)	100 (6.31)	3	6	4 (2P, 2S)
CGN	625	30 (1.9)	100 (6.31)	2	4	4 (2P, 2S)
CV	3000[5]	125 (7.9)	150 (9.46)	8	16	4 (2P, 2S)

Table 4 (Continued)
Ship Sewage Discharge Rates[1]

Ship Type[2]	Maximum Ship's Complement	Average 24-Hour Flow[3] (gpm [L/s])	Maximum Discharge of One Pump (gpm [L/s])	No. of Pumping Stations	Total Number of Pumps	Number and Location of Discharge Connections[4]
CVN	3300[5]	125 (7.9)	400 (25.24)	7	14	6 (3P, 3S)
DD & DDG 993	340	15 (1.0)	9 (0.57)	2	2	2 (1P, 1S)
DDG	323	8	9	2	2	2
DDG 51	341	15 (1.0)	40 (2.52)	2	8	4 (2P, 2S)
DDG 52-78	341	15 (1.0)	40 (2.52)	2	4	4 (2P, 2S)
DDG 79	380	20 (1.3)				
FFG	210	10 (0.6)	100 (6.31)	1	2	2 (1P, 1S)
LCC	1010[5]	45 (2.9)	150 (9.46)	2	4	4 (2P, 2S)
LHA	937[5]	40 (2.5)	100 (6.31)	3	6	6 (2P, 2S)
LHD	1104[5]	50 (3.2)	20 (1.26)	2	4	4 (2P, 2S)
LPD 4	510[5]	25 (1.6)	150 (9.46)	3	6	4 (2P, 2S)
LPD 17	165	20 (1.3)				
LPH	1420[5]	60 (3.8)	100 (6.31)	3	6	6 (3P, 3S)
LSD	375[5]	20 (1.3)	100 (6.31)	2	4	2 (1P, 1S)
MCM, MHC	81	5 (0.3)				
SSBN	155	10				
SSN	133	10 (0.6)				

[1]For wastewater disposal systems aboard ships, refer to DTRC/SME-91/53, Catalog of Shipboard Pollution Abatement Systems.
[2]For more information on U.S. Naval Vessels, refer to NAVSEA S0300-A4-MAN-A1C/(U), Naval Vessel Register/Ships Data Bank.
[3]Based on maximum ship's complement at 60 gpcd (227 Lpcd). Flows raised to next highest 5 gpm (19 Lpcd).
[4]P = discharge connection on the port side of the ship; S = discharge connection on the starboard side of the ship; A = discharge connection on the stern side of the ship.
[5]The following ships carry additional air wing troops:

CV: 2500	LPD: 930
CVN: 2800	LPH: 1560
LHA: 1700	LSD: 450
LHD: 1900	LCC: 700

The following revised list of equivalent ships was established by the Naval Sea Systems Command (NAVSEASYSCOM) for shore collection of ship sewage (ship types are as listed in Secretary of the Navy Instruction (SECNAVINST) 5030.1L, Classification of Naval Ships and Craft.

Ship Type	Equivalent Ships
DD	CGN, CG, DDG, FF, AGFF, FFG
LPD	AGF, LCC
AFS	AOR
AO	AOE
ASR	ATF, ATS
SS	SSN, SSBN

NOTES: Abbreviations for commissioned ship types: AD-Destroyer Tender, AE-Ammunition Ship, AGF-Miscellaneous Command Ship, AO-Oiler, AOE-Fast Combat Support Ship, ARS-Salvage Ship, CG-Guided Missile Cruiser, CGN-Guided Missile Cruiser (Nuclear Propulsion), CV-Aircraft Carrier, CVN-Aircraft Carrier (Nuclear Propulsion), DD-Destroyer, DDG-Guided Missile Destroyer, FFG-Guided Missile Frigate, LCC-Amphibious Command Ship, LHA-Assault Ships, Landing Amphibious, LHD-Large Helicopter, Dock Ship, Amphibious, LPD-Amphibious Transport Dock, LPH-Amphibious Assault Ship, LSD-Dock Landing Ship, MCM-Mine Countermeasure Ship, MHC-Mine Hunters, SSBN-Fleet Ballistic Missile Submarine (Nuclear Propulsion), SSN-Submarine (Nuclear Propulsion).

c) Intermittent periods of increased use because of training activities or other personnel mobilization exercises common to military installations. Training activities or other mobilization exercises will create short-term increases in domestic wastewater and, potentially, industrial flows. These intermittent activities may result in the peak wastewater flows and loads. Facilities should be designed to handle routine variations in flow and load from training and other routine exercises in a manner to ensure acceptable performance and reasonable O&M costs. For example, an equalization system may provide flow and load dampening to accommodate these significant variations. Facilities will not be designed to accommodate peak surges resulting from emergency mobilizations.

d) Intermittent periods of reduced use. Low flows can also be a problem. Therefore, design the wastewater facility to

operate efficiently over a range of flows (for example, provide parallel trains that can be taken out of service, etc.).

e) Changes in requirements or the installation's mission. Designs should include provisions for expansion, contraction, or other modification because of more stringent effluent requirements or installation mission changes. Make efforts to maximize operational flexibility.

3.3.3 Wastewater Loadings. Wastewater loadings are typically calculated based on the projected flows and wastewater pollutant concentrations and are expressed in pounds per day (lb/d) (kilograms per day [kg/d]). Where possible, determine loadings by analyzing the wastewater to be treated or similar wastewater.

3.3.3.1 Domestic Wastes. Every effort should be made to use measured data in planning and designing for wastewater flows. As a last resort, if no wastewater data are available, use the typical concentrations for domestic wastewater from WEF MOP 8, Volume I. Note, however, that these are average data; make adjustments for regional weather effects and collection system I/I before using these values.

3.3.3.2 Industrial Wastes. Determine industrial wastewater characteristics used in design from a survey of the actual wastes involved, or from knowledge of wastes at similar facilities. For additional information on industrial waste characteristics, refer to MIL-HDBK-1005/9 and MIL-HDBK-1005/17.

3.3.3.3 Ship Sewage. Ship sewage settles well and is amenable to biological treatment, but it may be septic. Table 5 presents typical concentrations (wastes from shipboard industrial activities are not included).

The high dissolved solids, chloride, sulfates, and sodium concentrations apply when seawater flushing or ballast systems are used. For more information on ship sewage, see NAVSEA S9086-T8-STM-010/CH-593, Naval Ships' Technical Manual.

Table 5
Typical Ship Sewage Concentrations

Characteristic	Concentration (mg/L)
Total suspended solids	600
Total dissolved solids	20,000
Chlorides	11,000
Sulfates	1,500
Sodium	6,200
Other dissolved solids	1,300
Biochemical oxygen demand (BOD)	400

3.3.3.4 Effect of Wastewaters with High Seawater Content.

a) Performance. High concentrations of seawater tend to inhibit biological treatment. Process inhibition is related to the chloride concentration of the wastewater.

(1) For new designs, in the absence of pilot plant data or treatment data from similar wastewaters, compensate for high seawater content according to the data presented in Table 6.

(2) In analyzing the capacity of existing treatment facilities to receive ship's wastewater, use figures as determined in Table 6. If these indicate overloading solely because of chloride inhibition, conduct pilot plant tests before planning any expansion.

(3) Sudden changes in chloride concentration may upset biological processes. Consider equalization storage to limit chloride variation at the wastewater facility to 200 mg/L/h at chloride concentrations in excess of 5,000 mg/L.

Table 6
Chloride Inhibition of Biological Nitrification

Process	Maximum Chloride Concentration for No Inhibition	Concentration for Chlorides in Excess of Maximum Level (1)
Trickling filters and rotating biological contactors	5,000 mg/L	Referring to appropriate design loading curve, decrease loading an amount corresponding to one percentage point of removal efficiency per 1,000 mg/L of chlorides in excess of 5,000 mg/L
Activated sludge	5,000 mg/L	Decrease loading by 2% per 1,000 mg/L chlorides in excess of 5,000 mg/L
Aerobic and facultative lagoons	8,000 mg/L	Increase detention time by 2% per 1,000 mg/L chlorides in excess of 8,000 mg/L

(1) Highest average chloride concentration expected over 24 hours.

b) Maintenance. High seawater content in wastewater will aggravate incrustation problems. Avoid fine bubble air diffusion systems, and design orifices in trickling filter flow distributors or in aeration devices to facilitate periodic cleaning of mineral deposits. Use care in selecting construction and equipment materials.

Section 4: NAVY WASTEWATER COLLECTION AND TRANSMISSION SYSTEMS

4.1 Introduction. Design information on wastewater collection and transmission systems is extensively covered in WEF MOP FD-5. This section addresses two wastewater collection and transmission topics that are not addressed in MOP FD-5: pier and wharf systems and drydock facilities.

4.2 Pier and Wharf Systems. Design the ship sewage collection system on piers or on shore for the peak flow from the maximum planned berthing with the sewer flowing full.

4.2.1 Layout/Location. Use a pressure manifold connected to the gravity sewer by a single 4-inch (100-mm) diameter pipe for the collection system at each berth. The manifold should have four single 4-inch (100-mm) receiving connections spaced 150 feet (46 meters [m]) apart on a 4-inch (100-mm) diameter pressure sewer (see Figure 1). This layout has the following advantages:

a) It provides large reduction in peak flows by combining multiple discharges from a ship or nested ships into a single stream, thereby increasing the head on the ship's pumps.

b) By reducing peak flow, it allows berthing of other ship types (other than those shown on the design berthing plan) at the berth.

c) It is self-regulating and self-cleaning, and it avoids failure or maintenance problems inherent in regulating valves or other devices.

To prevent pumping from one berth into another and to allow ships with lower head pumps to discharge into the pier sewer, each berthing space must be isolated. Isolate the berths by providing one separate manifold at each berth connected to the gravity pier sewer. Where the berthing space is less than 600 feet (183 m), the number of outlets should be reduced to fit the space available. In such cases, it may be necessary to reduce the 150-foot (46-m) spacing between outlets. For carrier berths, two standard 4-inch (100-mm) manifolds, each with four 4-inch (100-mm) outlets, should be used. See Figure 2 for typical collection sewer layouts on different pier types.

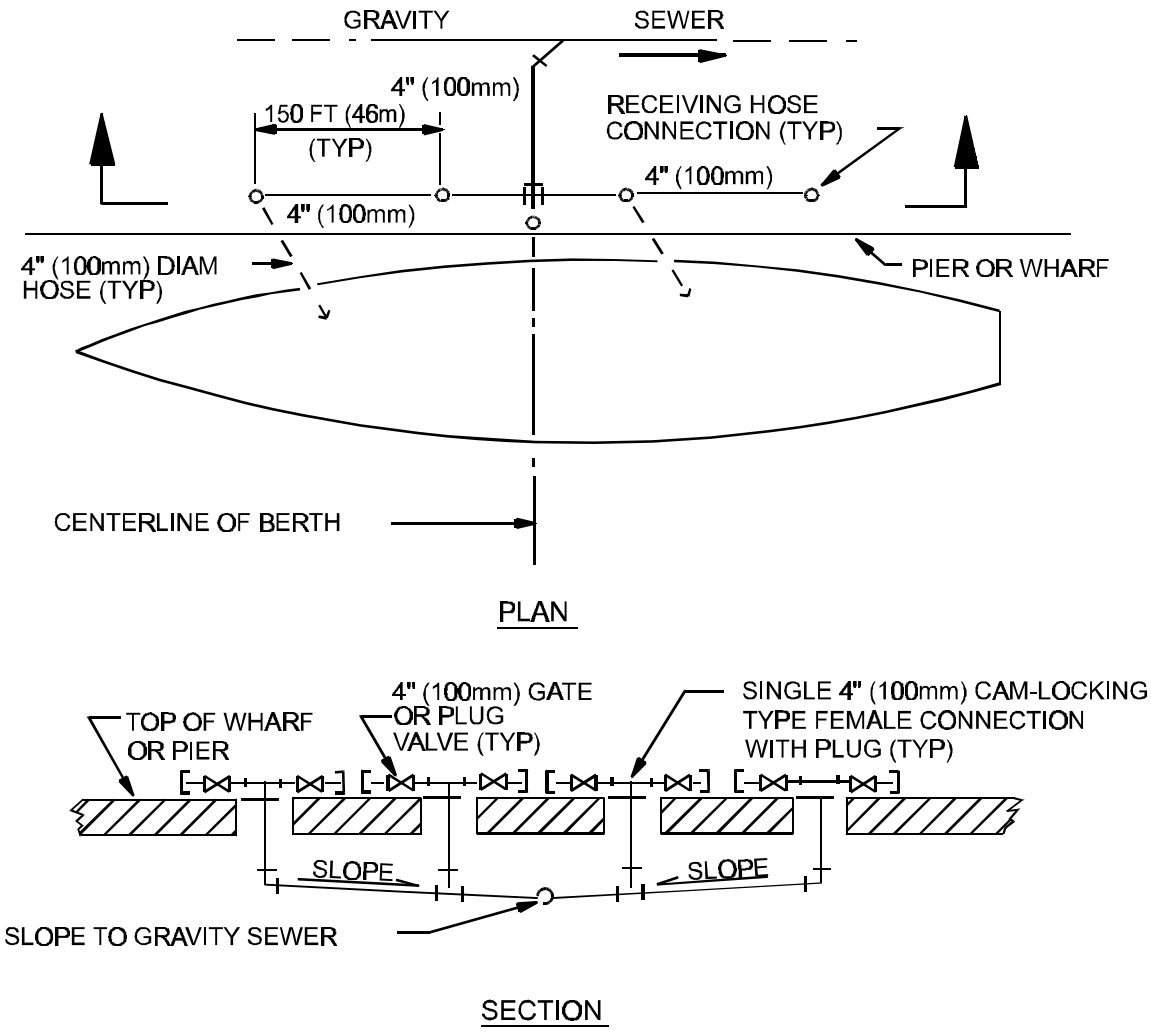

NOTE: DESIGN RECEIVING HOSE CONNECTIONS FOR 3000 LB (13,000 N) PULL IN ANY DIRECTION.

Figure 1
Pressure Manifold Schematic for Pier and Wharf Systems

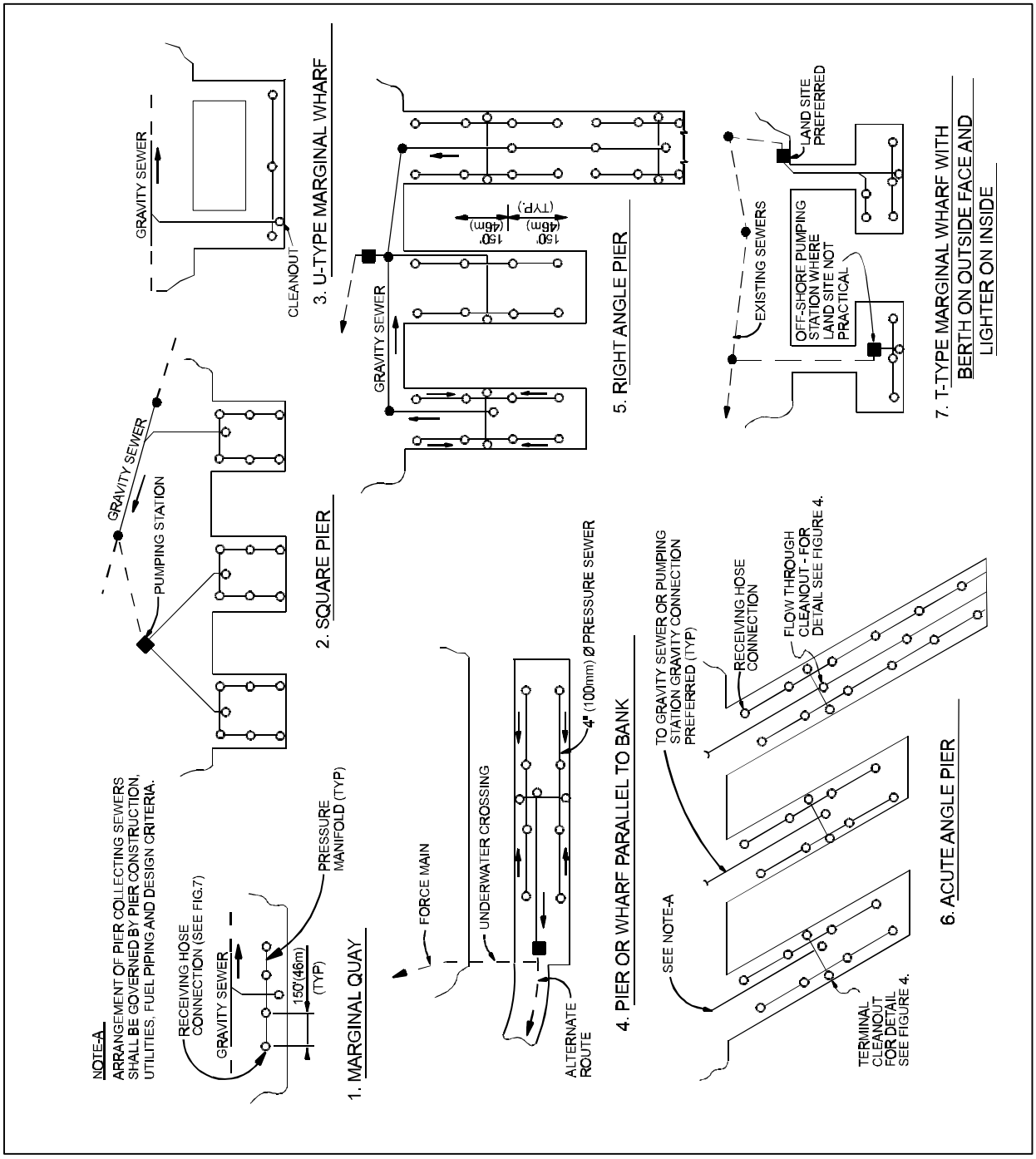

Figure 2
Collecting Sewer Layout for Alternative Pier Types

Locate all collecting sewers behind the permanent wharf or pier construction, away from the fender, to avoid impact loads and damage. Locate pump stations off the pier, behind the bulkhead lines. If location along the pier deck is required, do not restrict working area on the pier. Lines behind wharves should always be buried. See Figures 3 and 4 for typical installation on piers and quay walls. For design of new piers and quay walls, consider locating sewers in utility tunnels. Reduced external corrosion and improved maintainability of sewers may offset higher construction costs.

4.2.2 Utility Connections. To ensure safety, shore-to-ship utility service connections at Navy shore facilities shall use the standardized color codes as a secondary identifier on waterfront wharf and pierside connections and shore-to-ship hose assemblies. The primary identifiers shall be plain language tags, nameplates, or labels. The color code for shore-to-ship service connections is as follows:

Shore Service	Color	Federal Standard 595(a) No. Fed. SPED-TT-E-489 No.
Potable Water (40 to 81 psig [4053 to 8207 kPa])	Blue, Dark	15044
Nonpotable Water (100 to 175 psig [10,132 to 17,732 kPa])	Red	11105
Sewer	Gold	17043

1. The above colors are used to identify ends of hose assemblies, pier-side valves, handwheels, or operating levers, and adjacent deck, curb, standpipe, or guard.
2. Color coding for shore-to-ship utility connections may vary from color coding for pier distribution piping or other shore piping systems. MIL-STD-101, Color Codes for Pipelines and for Compressed Gas Cylinders, governs the color codes used on pier distribution piping and other shore piping systems.
3. Pressures shown are nominal pressures and represent average conditions.
4. Psig = pounds per square inch gage pressure; kPa = kiloPascals.

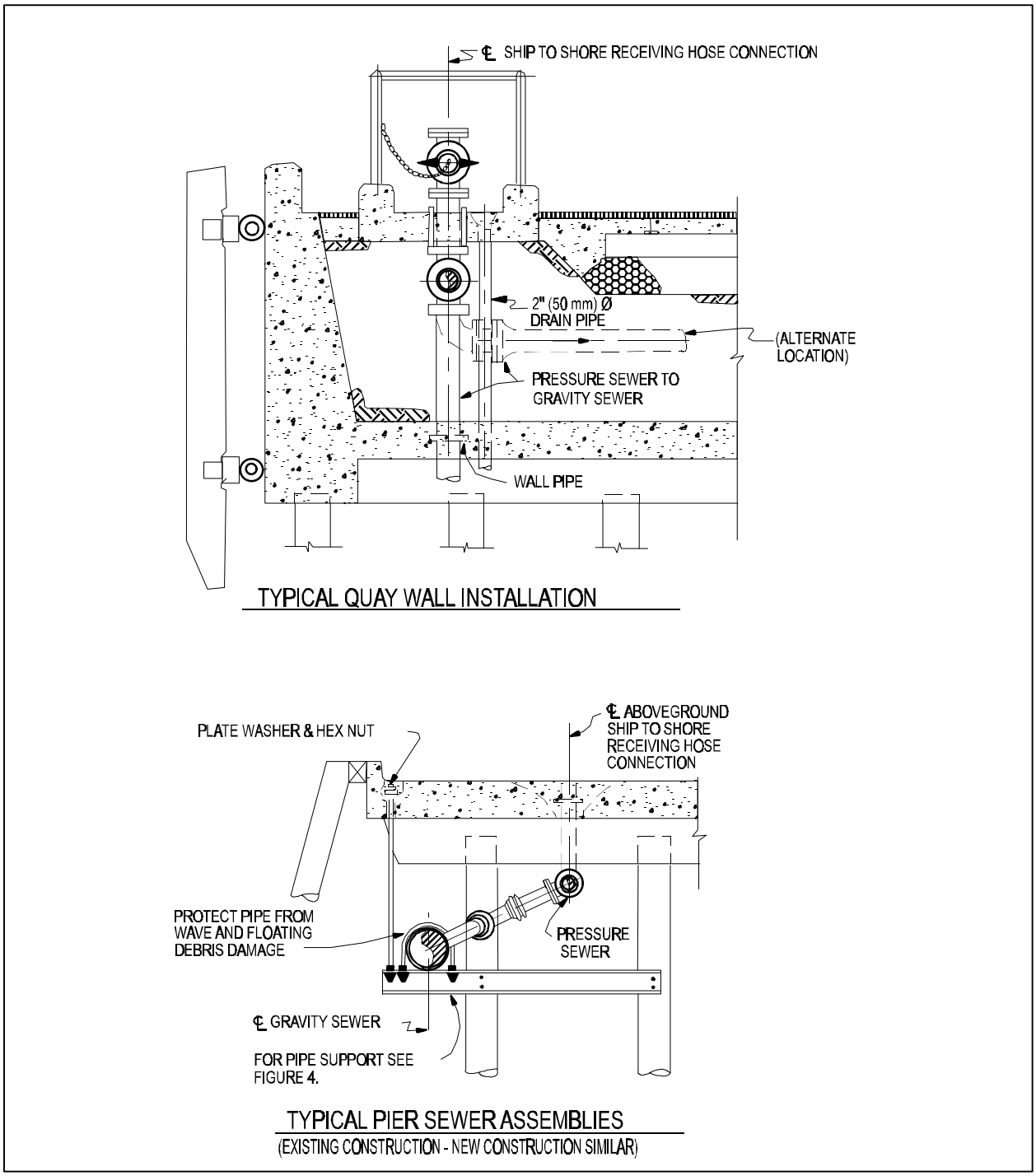

Figure 3
Typical Shore Collection Facilities for Receiving Ship’s Sewage

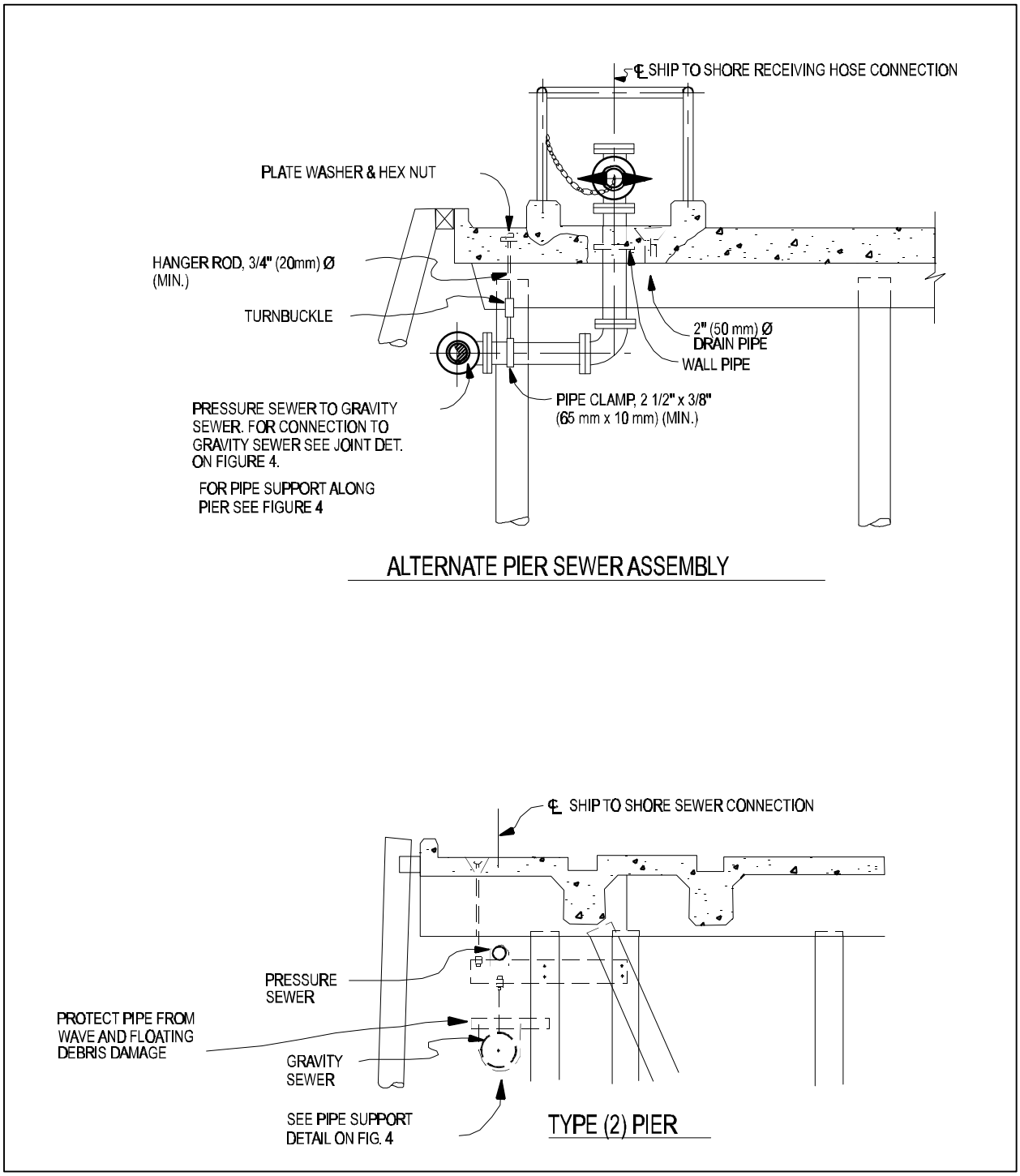

Figure 3 (Continued)

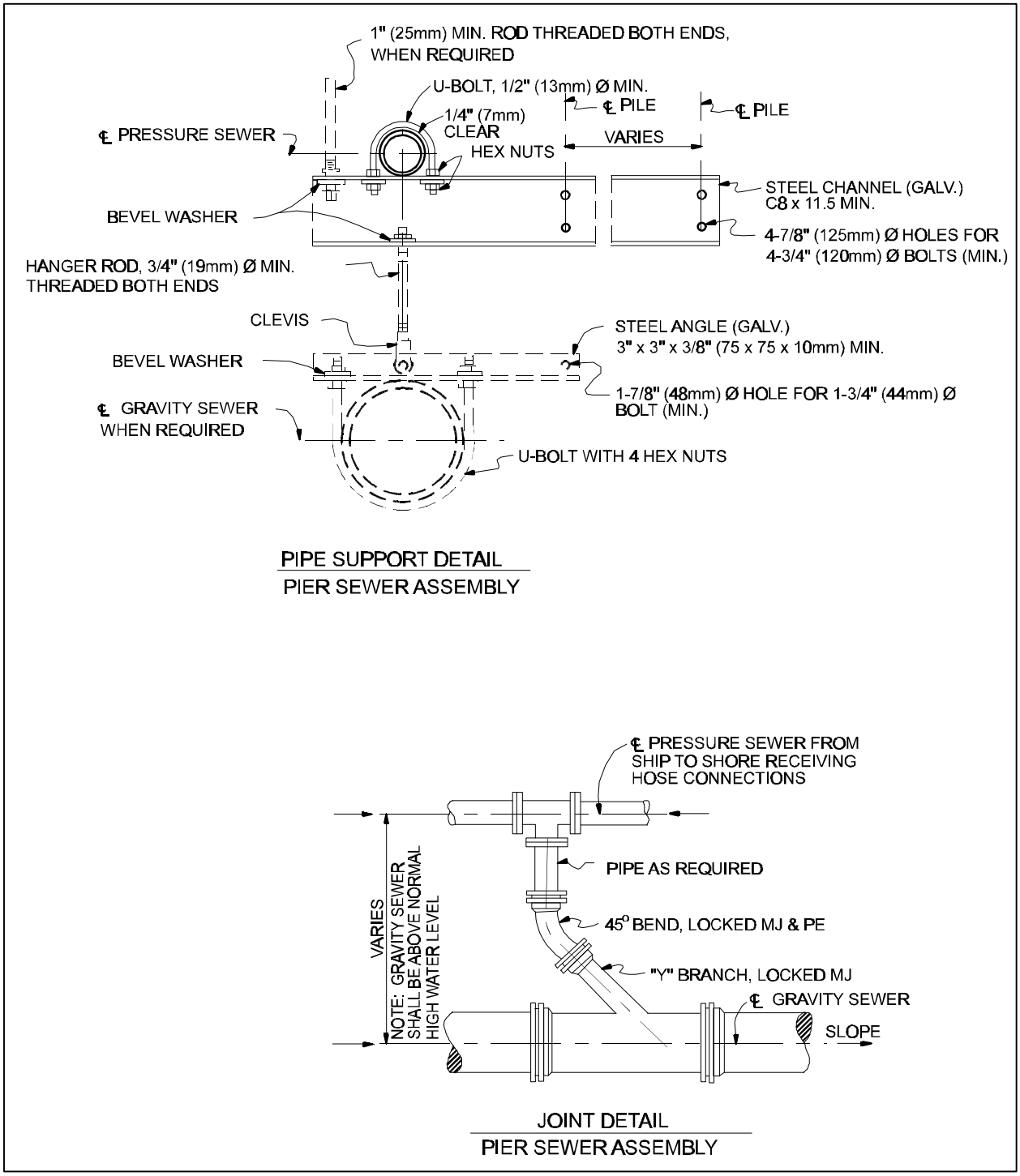

Figure 4
Details for Shore Collection Facilities Receiving Ship's Sewage

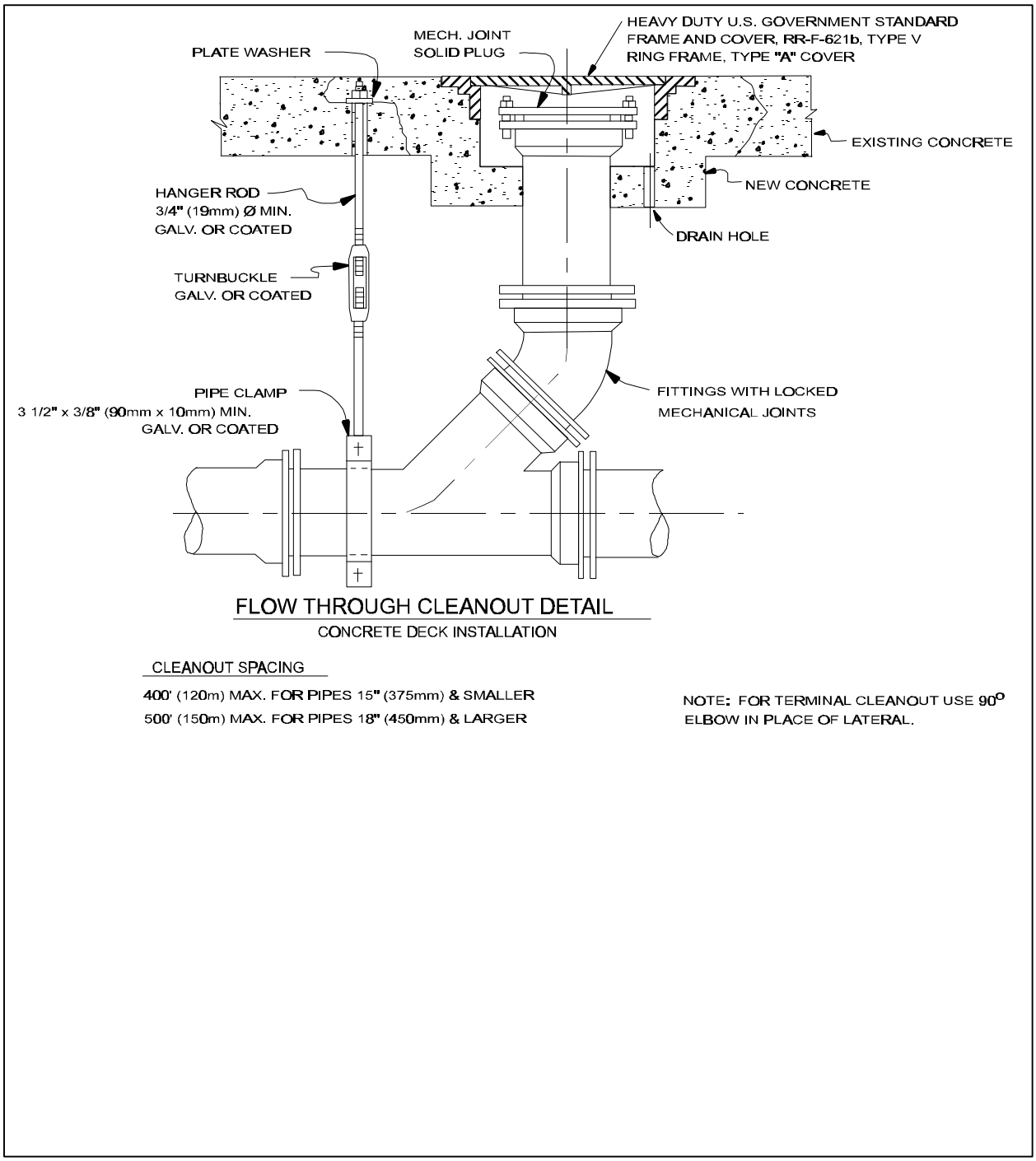

Figure 4 (Continued)

4.2.3 Environmental Considerations (Corrosion, Freeze Protection). For ship-to-shore connections, ductile iron sewer pipe, pier castings, and submerged and nonsubmerged exposed metal such as structural steel members, gratings, angles, pipe support hangers, fastening devices, and other appurtenances, use two-coat, coal-tar epoxy coating, conforming to Steel Structures Painting Council (SSPC) Paint No. 16, applied to total minimum dry film thickness of 16 mils (0.4 mm). For alternative corrosion protection coatings for different environments, refer to MIL-HDBK-1110, Paints and Protective Coatings for Facilities. Brush bare steel surface to remove all mill scale before applying the protective coating. Follow manufacturer's instructions for surface preparation and application to other materials. Evaluate the need for cathodic protection.

The following are references for cathodic protection:

a) MO-307, Corrosion Control

b) NFGS-13110, Cathodic Protection by Galvanic Anodes

c) NAVFAC letter (LTR) 11012, Cathodic Protection Systems, Interim Technical Guidance

See Figure 5 and refer to Naval Civil Engineering Laboratory (NCEL) Report No. R-593, Freeze Protection for Freshwater and Sanitary Piping Under Open Piers. Pipes installed under piers or wharfs in any geographic location must be protected from wave action and floating objects. If freeze protection is provided, protective jacketing of the insulation using aluminum, stainless steel, or coal-tar epoxy coated steel must be provided. Provide structural protection for the entire length of pipe run in addition to jacketing. Use steel cage of fabricated shapes or a catwalk for both access and piping protection.

a) Pipes installed under piers north of Philadelphia, PA, and Seattle, WA, and in northern inland and Great Lakes areas: install with conductive mineral film electric heating elements and polyurethane foam insulation.

b) Pipes installed under piers between and including Philadelphia, PA; Norfolk, VA; Seattle, WA; and Portland, OR: install with polyurethane foam insulation. Refer to NCEL R-593 for flushing requirements.

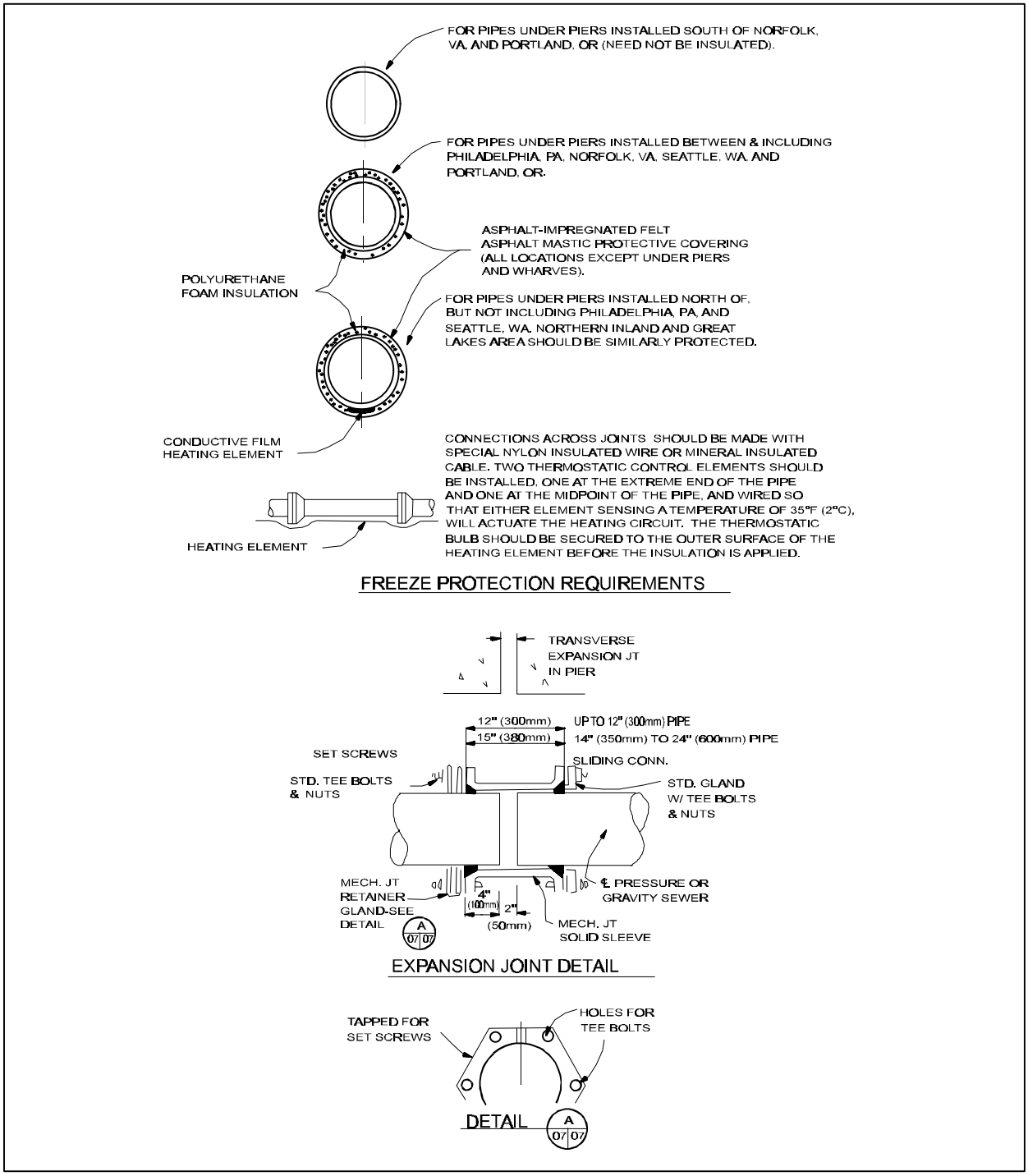

Figure 5
Piping Details for Shore Collection Facilities
Receiving Ship's Sewage

c) Pipes installed south of Norfolk, VA, and Portland, OR: no insulation required. See NCEL R-593 for flushing requirements.

d) Refer to Figure 5 and NCEL R-593 for details of heating element installation.

4.2.4 Odor/Septicity Control. Slope sewers as much as possible to minimize detention time and provide aeration. Aerate holding tanks unless detention time is less than 3 hours at average 24-hour flow.

Keep force mains as short as possible. Check for the possibility of sulfide generation. Make provisions to control sulfide generation if necessary using an injection of oxidizing chemicals such as chlorine, permanganate, or hydrogen peroxide. Consult suppliers of chemicals or generation and feed equipment regarding costs and expected performance. Refer to WEF MOP FD-5 for rational methods to predict sulfide generation rates and methods of control.

a) Maintain minimum flow velocity of 3 feet per second (fps) (0.9 meters per second [m/s]).

b) Provide cleanouts and air relief valves as required.

c) Provide check valves at pump stations.

4.2.5 Structures and Appurtenances. Refer to Table 7 and Figures 3 through 7. Figure 6 shows ship-to-shore sewage hose components. Figure 7 illustrates an aboveground receiving hose connection.

4.2.6 Pump Stations. Make capacity equal to that of incoming sewers whenever this exceeds the expected peak flow. For pump station design for transfer of ship’s oily wastewater, refer to MIL-HDBK 1005/9.

4.2.7 Pipe. Mechanical joint, lined ductile iron should be used for exposed locations where high impact resistance is important. Support exposed pipe per manufacturer’s recommendations. In other exposed locations, for superior corrosion resistance, consider thermoplastic (high density polyethylene) pressure pipe with butt fusion joints. Plastic piping on pier and wharf systems should be protected from impact by floating debris and other hazards by placement in a specially

designed utility trench. For buried lines, apply general sewer pipe selection guidelines.

Table 7
Special Pier Structures and Appurtenances

Structure or Appurtenance	Where to Use	Details	Requirements
In-line cleanout	At junctions and changes of direction and when required according to spacing shown in details under regular manhole below	See Figure 4	
Regular manhole	Terminally on all lines; at all junctions and changes of direction; at changes in invert elevation or slope. Otherwise, according to spacing shown below: Pipe Size (in. [mm]) — Max Spacing (ft [m]) 18(450) or less — 400(120) 18-48 (450-1200) — 500(150) 48(1200) and greater — 600(180)	See NAVFAC Guide Spec NFGS-02530, Sanitary Sewage	Lower invert through manhole a distance equal to expected loss of head in manhole, plus 0.8 times any change in sewer size. For junction manholes, check which upstream invert is critical in determining outlet invert. Raise top of manhole above possible flooding level.
Drop manhole	When difference between inlet and outlet inverts exceed 2 ft (0.6 m)	See NAVFAC Guide Spec NFGS-02530	For difference less than 2 ft (0.6 m), increase upstream sewer slope to eliminate drop.

Table 7 (Continued)
Special Pier Structures and Appurtenances

Structure or Appurtenance	Where to Use	Details	Requirements
Siphons	For carrying sewers under obstructions or waterways.	Maintain velocity of 3 fps (0.9 m/s). Use no less than two barrels with min. pipe size of 6 in. (150 mm). Provide for convenient flushing and maintenance.	Use WEF MOP FD-5 for hydraulic design.
Inter-cepting sewers	Where discharge of existing sewers must be brought to a new concentration point.		Take special care against infiltration due to depth or proximity of surface water.
Traps and inter-ceptors	On all outlets from subsistence buildings, garages, mechanical shop, wash pits, and other points where grease or oil can enter system.	Displacement velocity 0.05 fps (0.015 m/s). Grease removal: in absence of other data use 300 to 400 mg/L. Provide for storage of 1 week's grease production (1 day if continuous removal is provided). Length = twice depth.	

Table 7 (Continued)
Special Pier Structures and Appurtenances

Structure or Appurtenance	Where to Use	Details	Requirements
Terminal cleanout	Terminally on all pier collection systems	See Figure 4	Locate where it will not interfere with other operations on the pier or other utilities.
Receiving hose connections		See Figures 6 and 7	Connection designed to receive the discharge from ships.
Pier collection sewer supports	Support collecting sewer under piers	See Figures 3 and 4	

4.2.8 Sewage Tranfer Hoses. Facilities should be provided for washing the end couplings and the exterior of the hose with hot potable water containing a standard stock detergent. Caps for each end of the hose should be provided and installed after washing. The clean hose should be stored in dry racks. See Figures 6 and 7 for transfer hose detail and receiving hose connection.

For further information, refer to NAVFAC MO-340, Ship-to-shore Hose Handling Operations Manual.

4.3 Drydock Facilities. Design the collection system for the graving dock for the peak flow from the maximum planned docking pattern with the sewer flowing full. Consider the following when designing drydock collection systems:

a) Separation of hydrostatic leakage from drydock wastewater. The water is generally not contaminated and can be discharged directly to storm sewers or open water depending on regulatory conditions.

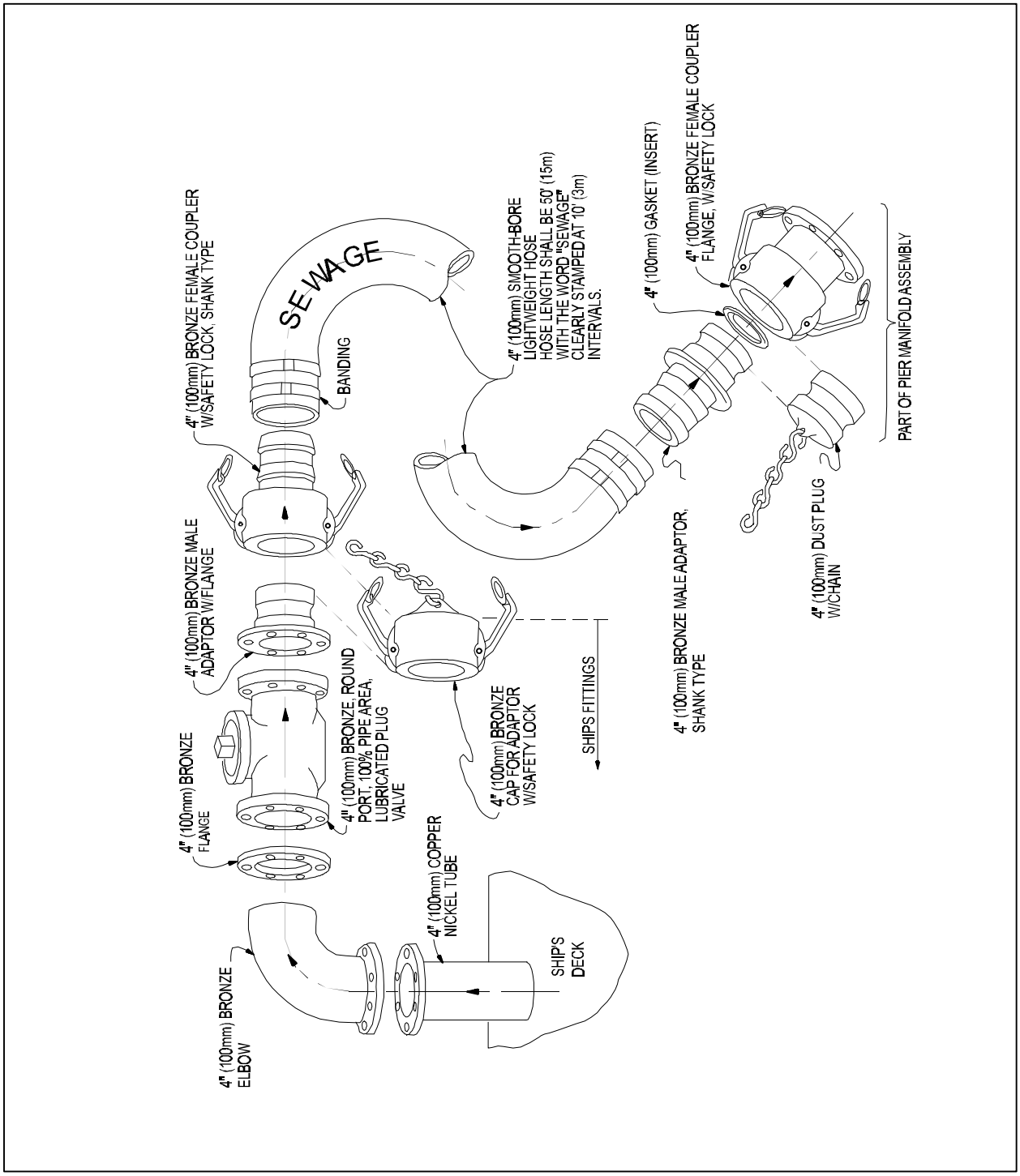

Figure 6
Ship-to-Shore Sewage Hose Components

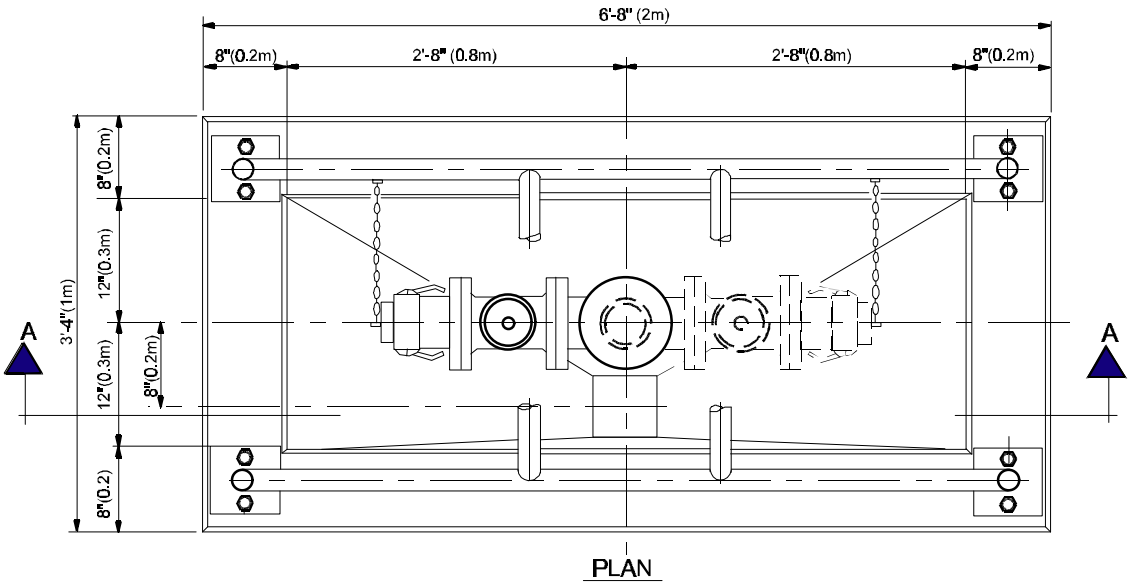

Figure 7
Aboveground Receiving Hose Connection

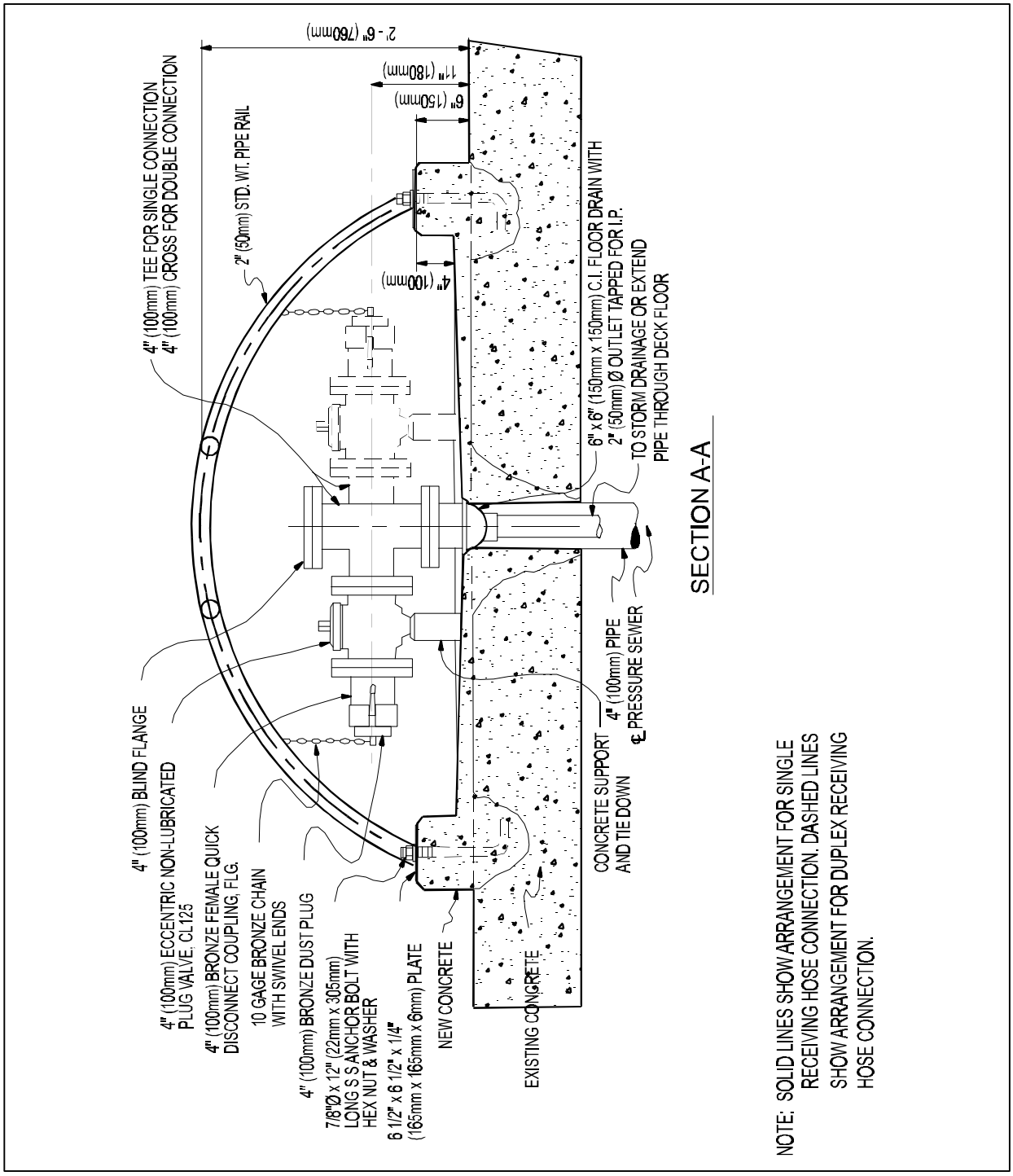

Figure 7 (Continued)

b) Separation of ship's domestic wastes from the industrial wastes generated by drydock activities. These industrial wastes include leakage, precipitation runoff, and washdown that carries sandblasting residue and paint.

4.3.1 Layout. Ships fitted with Collection-Holding-Transfer (CHT) should be connected to dockside sanitary sewers for CHT discharge. Ships without CHT should use scuppers and manifold connections to the ship's discharge points for transfer to sanitary sewer system in floor of drydock. See Figure 8 for typical collection system layout in drydock facilities to collect from CHT systems. Use receiving connection on pressure manifolds connected to gravity sewers.

4.3.2 Pump Station Features. Make capacity equal to that of maximum combined ship's discharge rate of ships in drydock. Furnish portable auxiliary pumping facilities when required. Refer to MIL-HDBK-1029/1, Graving Drydocks.

4.3.3 Sewage Receiving Connections and Transfer Hoses. See Figure 9 for underground drydock receiving hose connections. See Figure 7 for aboveground drydock receiving hose connections. Aboveground receiving hose connections should be used whenever possible. See paragraph 4.2.8 regarding transfer hoses.

4.3.4 Special Structures and Appurtenances. See Figure 4 for typical cleanout detail for drydock sewers.

Locate cleanouts in main sewer at a maximum spacing of 300 feet (91 m).

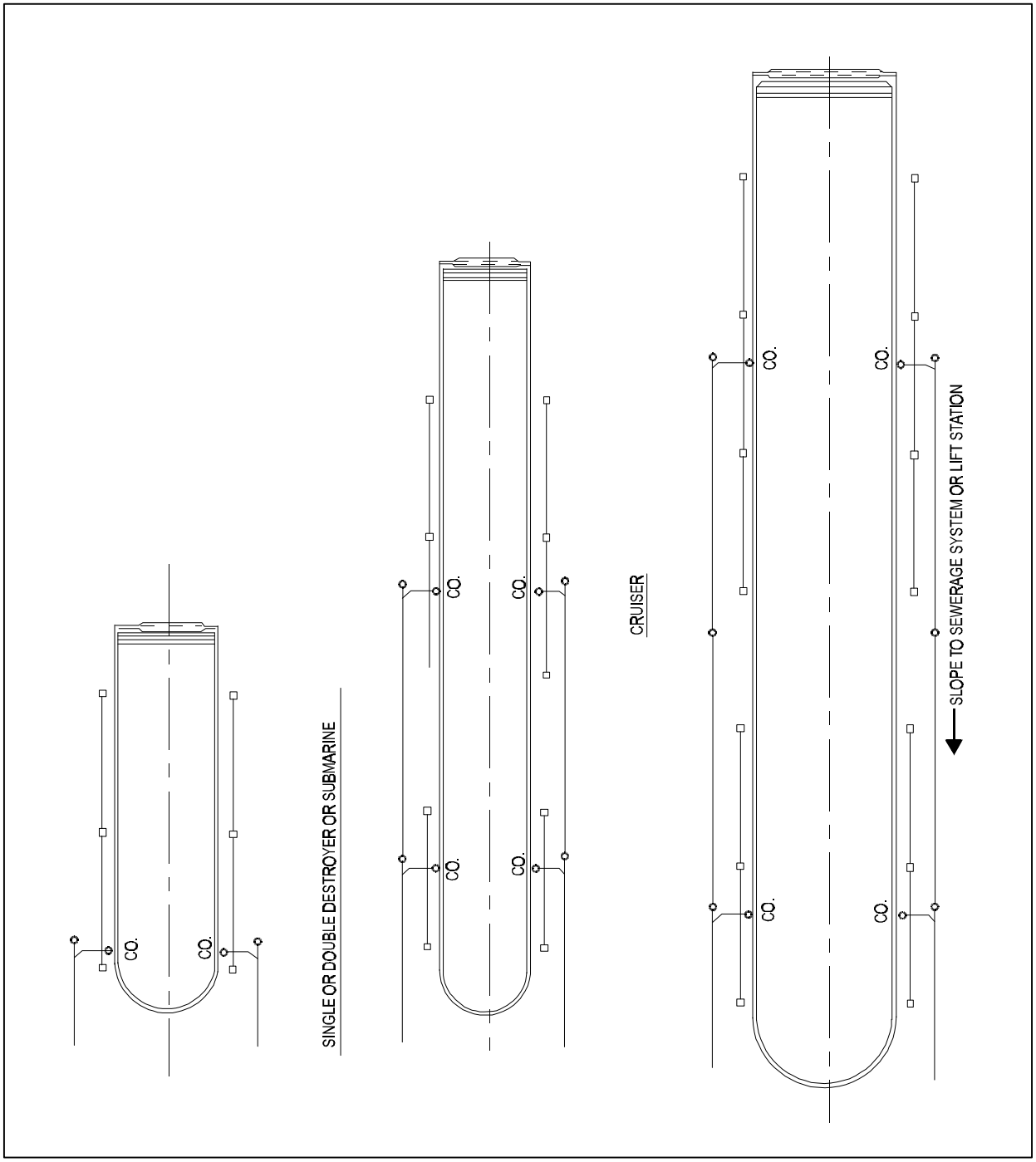

Figure 8
Typical Sewage Collection System Layouts for Drydock Facilities

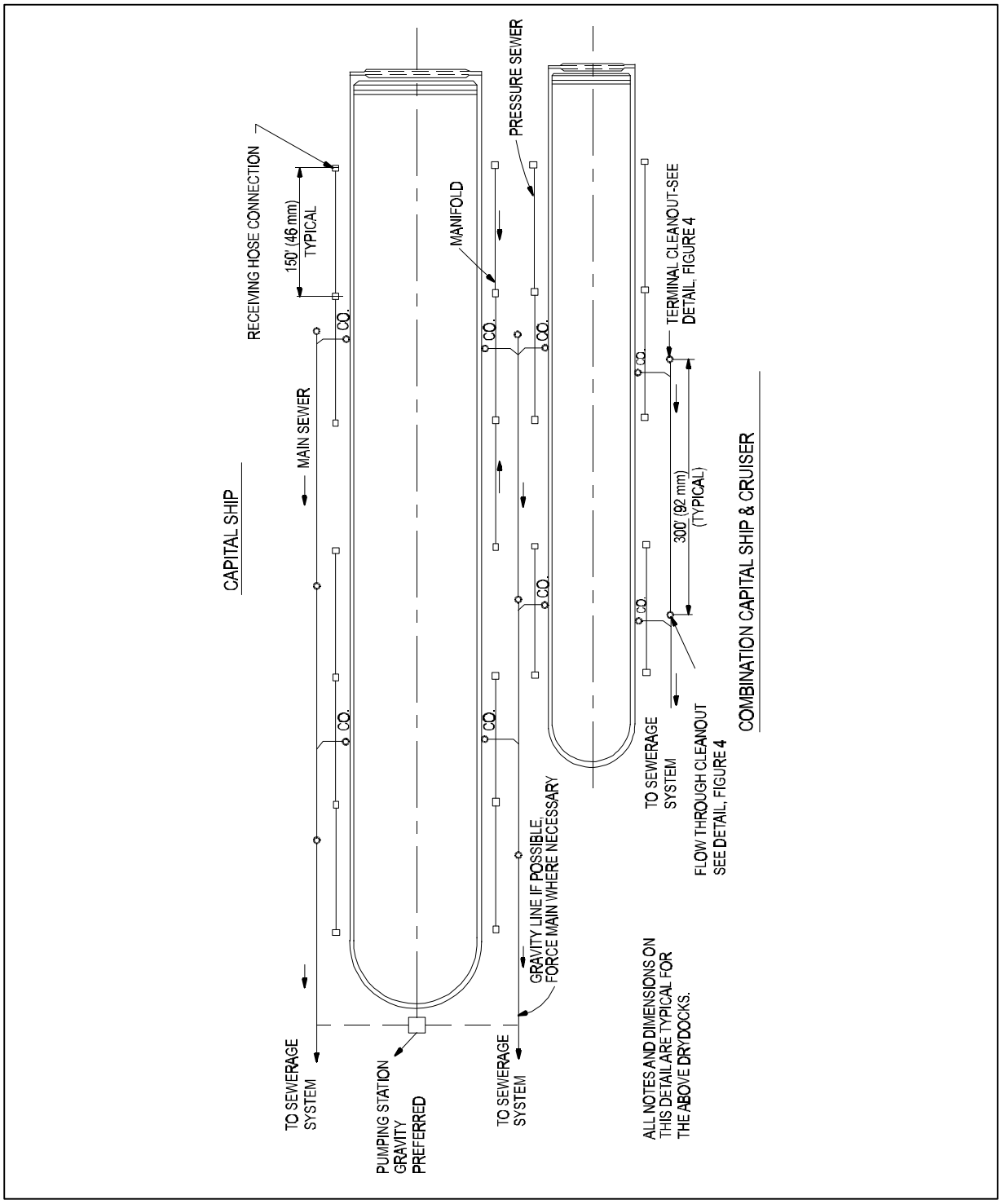

Figure 8 (Continued)

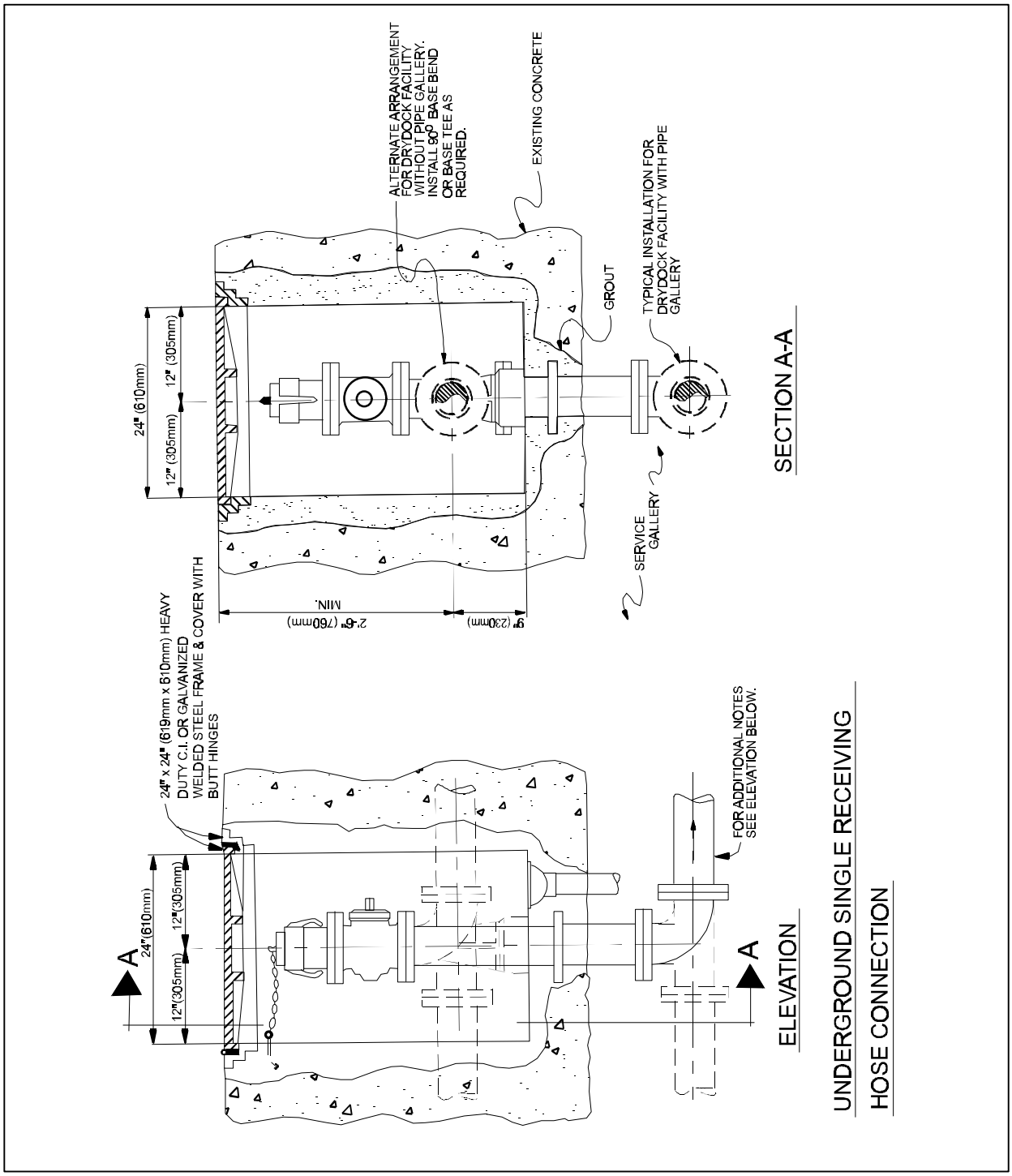

Figure 9
Underground Receiving Hose Connections for Drydock Facilities

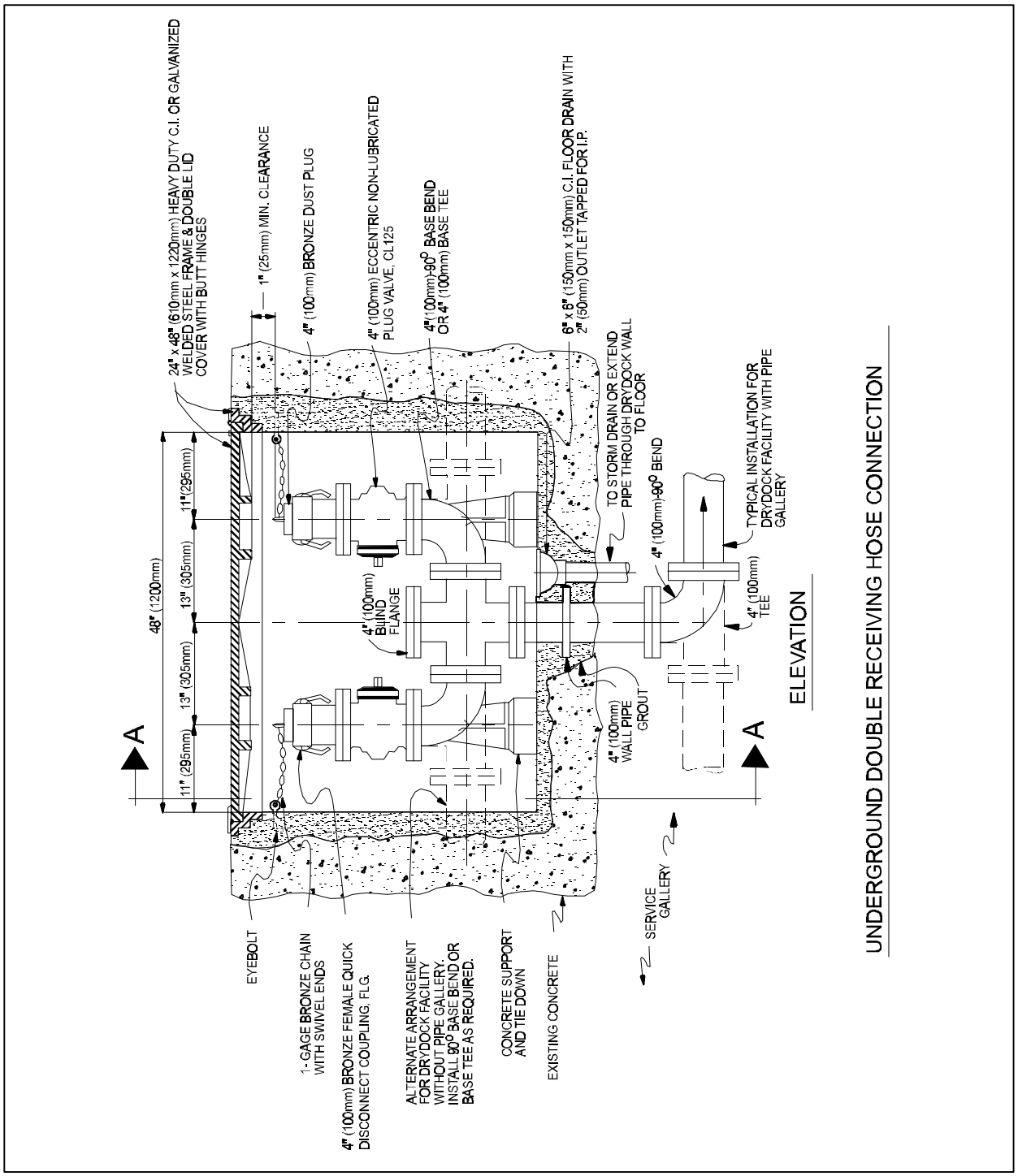

Figure 9 (Continued)

Section 5: OIL/WATER SEPARATORS

5.1 Section Overview. This section addresses military applications of oil/water separators (OWSs). It provides general information on OWSs, as well as specific information on determining the need for an OWS, principles of oil/water separation, OWS design criteria, and selection of OWS technology. Emphasis is given to conventional and parallel plate gravity OWSs, which are the prevailing types installed at military bases. Other technologies, such as flotation, filtration, and adsorption are also briefly discussed. These topics are not addressed in the WEF MOP 8.

5.2 Oil Classification. Oily wastewaters are generated in the industrial and maintenance areas of military installations from such activities as aircraft and vehicle maintenance and washing. The oils present in wastewaters may be of several types, including gasoline, jet fuel, diesel fuel, lubricants, and miscellaneous detergents. Regardless of type, they are typically classified into three major categories: free, emulsified, and dissolved.

5.2.1 Free Oil. Free oil consists of discrete globules large enough to rise as a result of buoyant forces and form an oil layer on top of the water. Theoretically, oil globules as small as about 20 microns can be classified as free oil. However, research indicates that the size of oil globules must be approximately 150 microns or greater to be effectively removed in a conventional gravity separation chamber.

5.2.2 Emulsified Oil. Emulsified oil exists as smaller droplets, approximately 1-20 microns, which form a stable dispersion in the water and are incapable of rising to form a separate oil layer without additional chemical treatment. Dissolved oil is soluble in water and is also incapable of removal by gravity separation.

5.2.3 Oily Wastes. Oily wastes discharged at military bases may include any or all of these classifications. While most of the oily waste is originally in the free state, the cleaning agents commonly used in the washing of floors, vehicles, aircraft, and other equipment at military installations are designed to increase the solvency of oil in water, and they cause the oil to become emulsified. Additionally, free oil can be mechanically emulsified through excessive agitation and turbulence, such as that caused by high velocities or pumping.

Centrifugal pumps are especially prone to emulsify oil. Conventional methods of measuring oil and grease do not differentiate free, emulsified, and dissolved oil. A method to provide this differentiation is described in American Petroleum Institute (API) Publication 421, Design and Operation of Oil-Water Separators.

5.3 Basis for Considering Oil/Water Separators. Primarily, oil/water separation is implemented at military installations to comply with the Federal, state and local requirements and to minimize the impacts of oils and greases on the collection system and downstream treatment systems. These considerations are further discussed below.

5.3.1 Regulatory Compliance. Regulations which may require the use of OWSs are primarily associated with PL-100-4, Water Quality Act of 1987. Discharge of wastewaters to waters of the United States is regulated under 40 CFR Section 402 NPDES permit regulations, 40 CFR Section 403 Oily Wastewater Discharges to Sewers Under General Pretreatment Regulations, and Stormwater Permit Requirements under 40 CFR Section 122.26. These regulations are enforced by Federal, state, or local regulatory authority. Military services also enforce these regulations for oily waste being discharged to Federally owned treatment works governed under the Federal Facility Compliance Act.

Discharges of oily waste from fuel storage areas must be permitted under the NPDES program. The installation should implement pollution prevention measures and best management practices to minimize or eliminate oily waste contact and discharge from diked areas at the fuel storage area which will eliminate the need for oil/water separation. Spill Prevention Control and Countermeasures Requirements, 40 CFR 112.7, is for emergency spill control actions and should be considered separate from routine operations. However, provisions of the General Pretreatment Regulations applicable to oily waste discharges to sewerage systems are found in Section 403.5(b). These provisions prohibit discharge of the following:

a) Any pollutants which cause interference or pass through treatment works

b) Pollutants which create a fire or explosive hazard in the sewerage system

c) Petroleum oil, nonbiodegradable cutting oil, or products of mineral oil origin, in amounts that will cause

interference or pass through or exceed effluent discharge limits (some sewer use ordinances also contain specific numerical limits)

d) Pollutants which result in the presence of toxic gases, vapors, or fumes within the sewerage system that may cause acute worker health and safety problems

In addition to these provisions, many POTW sewer use ordinances prohibit oil and grease discharges that could accumulate in collection system piping and obstruct flow, or that could accumulate in the sludge of treatment works, resulting in hazardous substance disposal requirements.

5.3.2 Related Impacts on Collection/Treatment Systems. In addition to impacts outlined in regulations, wastewater containing significant quantities of oil and grease can impact the collection and treatment systems in the following ways:

a) Accumulation of oil and grease in collection piping, causing obstruction of flow

b) Accumulation in treatment facility sludge, resulting in hazardous substance disposal requirements

For these reasons, wastewater discharges from maintenance facilities and washracks should be managed to prevent adverse effects to the treatment plant and to protect the environment from releases to surface waters.

5.4 Evaluating the Need for Oil/Water Separators. Numerous oil/water separators (OWSs) exist at military bases, some of which are not needed or are not accomplishing their intended purpose. Misapplications and inadequate performance have resulted from poor design, improper selection of pre-manufactured units, failure to adequately understand the character of wastewaters being treated or pretreated, and lack of proper maintenance. Consequently, the need for an OWS should be carefully evaluated before undertaking its design.

Figure 10 presents a decision diagram for determining whether an OWS is needed at a particular location. In using the decision diagram, the following source control issues should be considered:

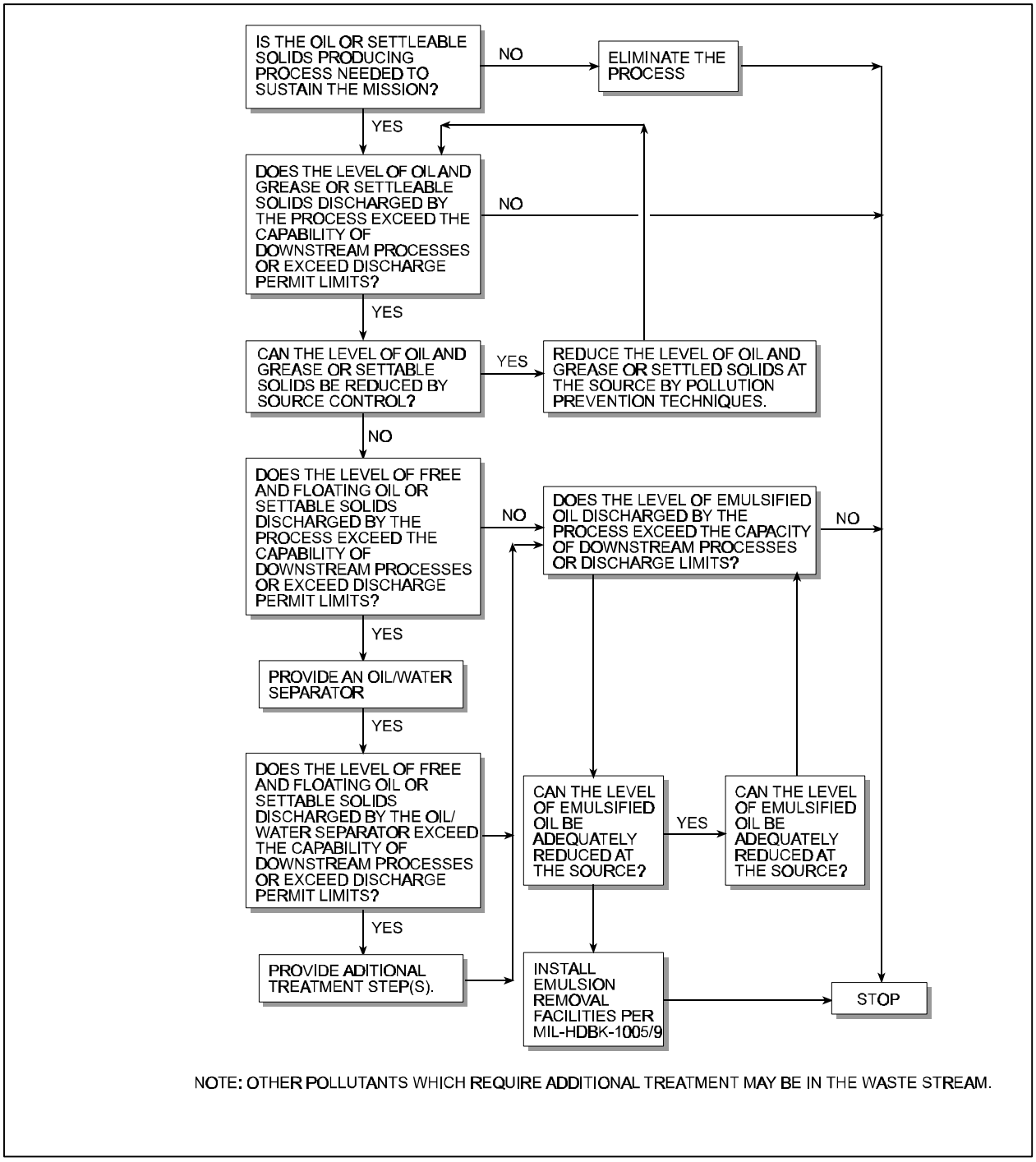

Figure 10
Decision Tree for Oil/Water Separators

a) Using detergents to clean up work areas increases emulsification and inhibits gravity oil/water separation. Use of high-pressure water also causes emulsification but is generally less detrimental to oil/water separation than the use of detergents.

b) Use of dry absorbents should be considered to minimize the amount of oils reaching sewers. Dry absorbents may be collected and disposed of with solid waste materials. If possible, wet processes should be replaced with dry processes, and floor drains should be plugged.

c) Implementation of point source controls may eliminate or reduce the wastewater volume and contaminant concentrations. For example, used oils may be segregated for disposal or reuse rather than allowing them to enter the wastewater stream. Implementing point source controls may also be more economical than providing a wastewater treatment system. Point source control techniques include process change or modification, material recovery, material substitution, wastewater segregation, and water reuse/recycling.

d) Consider changing the point of discharge to negotiate less stringent requirements and to protect sensitive environmental areas. For example, it may be practical to reroute a stormwater permitted outfall to a sanitary indirect discharge when the stormwater flows are low and the permitted stormwater discharge limits are overly restrictive. Extraneous stormwater should be excluded from sanitary systems.

e) The stormwater pollution prevention plan should implement best management practices which will minimize or eliminate the need for oil water separators in most instances.

f) The formation of oil emulsions should be minimized and emulsions should be segregated for special treatment whenever possible. Emulsions are usually complex, and bench or pilot plant testing is generally necessary to determine an effective method for emulsion breaking.

g) Current process operating practices should be investigated to determine if good housekeeping practices are employed and if changes can be made to reduce waste materials or use of excess water. In many cases, proper attention to control of operations can greatly reduce the amount of soluble oil requiring treatment. Minimizing leaks, avoiding spills, using

drip trays, employing spill containment techniques, and discarding oil only when it is no longer serviceable should be a part of any oily waste control program. OWSs are not to be used for spill containment.

5.5 Treatment Technology. Selection of the appropriate treatment process for oily waste is dependent on the oil classification. Under proper quiescent conditions, free oil can be removed by gravity separation. Emulsified oil cannot be removed by gravity separation unless it can first be converted to free oil by breaking the emulsion. Emulsified oil may be removed by air flotation, although the emulsion may also have to first be broken for this process to be effective. Removal of soluble (dissolved) oil generally requires biological treatment or adsorption onto a solid phase sorbent such as activated carbon.

It should be noted that other pollutants, such as solvents, phenols, dissolved metals, and other toxic and hazardous pollutants, are not effectively removed by oil/water separation technology and may require additional source control or pretreatment.

Designers should also understand that lack of proper maintenance is one of the biggest causes of OWS failure. Designers must design for ease of maintenance so as to promote adequate periodic maintenance. For example, buried cylindrical separators are almost impossible to maintain and thus their use is highly discouraged.

5.5.1 Gravity Separation. Two basic types of gravity OWSs are in common use: a) conventional, rectangular-channel units, commonly called API separators because they are usually based upon design standards developed by the American Petroleum Institute; and b) parallel plate separators. In either case, removal is a function of residence time, specific gravity of the oil, oil droplet size, fluid salinity, and fluid temperature.

Well designed and operated API gravity separators are capable of removing oil globules with a diameter greater than 150 microns and achieving effluent levels of free oil as low as 100 mg/L. Parallel plate separators are generally designed to remove oil globules greater than 60 microns in diameter, and can meet effluent limits as low as 50 mg/L of free oil. The total oil content of the effluent will be greater, depending on the amount of emulsified and dissolved oil present. Other factors will also affect the efficiency of oil removal, including oil-specific

gravity, droplet size, OWS hydraulic retention time, and temperature.

While gravity separators are designed to remove oil, they also function as a sedimentation unit. As a result, solid particles more dense than water will tend to settle out and provisions must be included to remove accumulated solids. Knowledge of the solids content of the influent wastewater stream is particularly important in the selection of parallel plate separators because they are prone to increased maintenance and clogging problems.

5.5.1.1 Conventional Gravity Separators. A typical conventional separator system is shown in Figure 11. The separator itself has three chambers separated by baffles: an influent chamber, the main separator chamber, and an effluent chamber. The operation of these chambers is described below:

a) Influent Chamber. The influent chamber is used to remove free oil that has already separated from the oil/water mixture during conveyance to the unit. Two baffles separate the influent chamber from the larger, main settling chamber. The upper baffle is placed at the top of the water level and extends three quarters of the way to the bottom. It prevents the floating oil and scum from entering the main chamber, and allows it to be skimmed off through an overflow pipe. The lower baffle extends from the bottom and is used to direct the wastewater to the top of the main chamber and to prevent short-circuiting.

b) Main Separator Chamber. In the main separator chamber, the oily wastewater flows from one end to the other under quiescent conditions. The wastewater velocity is kept very low, typically less than 3 feet per minute (0.9 m/min) to prevent turbulent mixing. For flat-bottom chambers, removal of settled solids is typically accomplished by taking the chamber out of service; the chamber is drained and accumulated solids are removed either manually or by a vacuum truck. If the floor is sloped, the solids can be removed from the hopper or V-bottom trough by pumping or gravity discharge while the unit is still in service.

Where large amounts of solids are anticipated, mechanical equipment may be provided to move the solids to the collection point. A chain-drive mechanism is most common. Attached between a pair of chains are crosspieces, or “flights," extending the full width of the tank or bay and spaced at specific intervals. Flights have been wooden in the past but are

now also being constructed of alternative materials. Settled solids are dragged to the solids hopper at one end of the tank and removed.

An oil-skimming device should be provided at the end of the separation chamber. The rotatable, slotted-pipe skimmer is the most common type. Other oil-skimming devices include belt skimmers and floating skimmers. The waste oil collected by the skimmer is discharged to a waste oil holding tank. The tank should be designed so that confined space entry is not required for operation or maintenance.

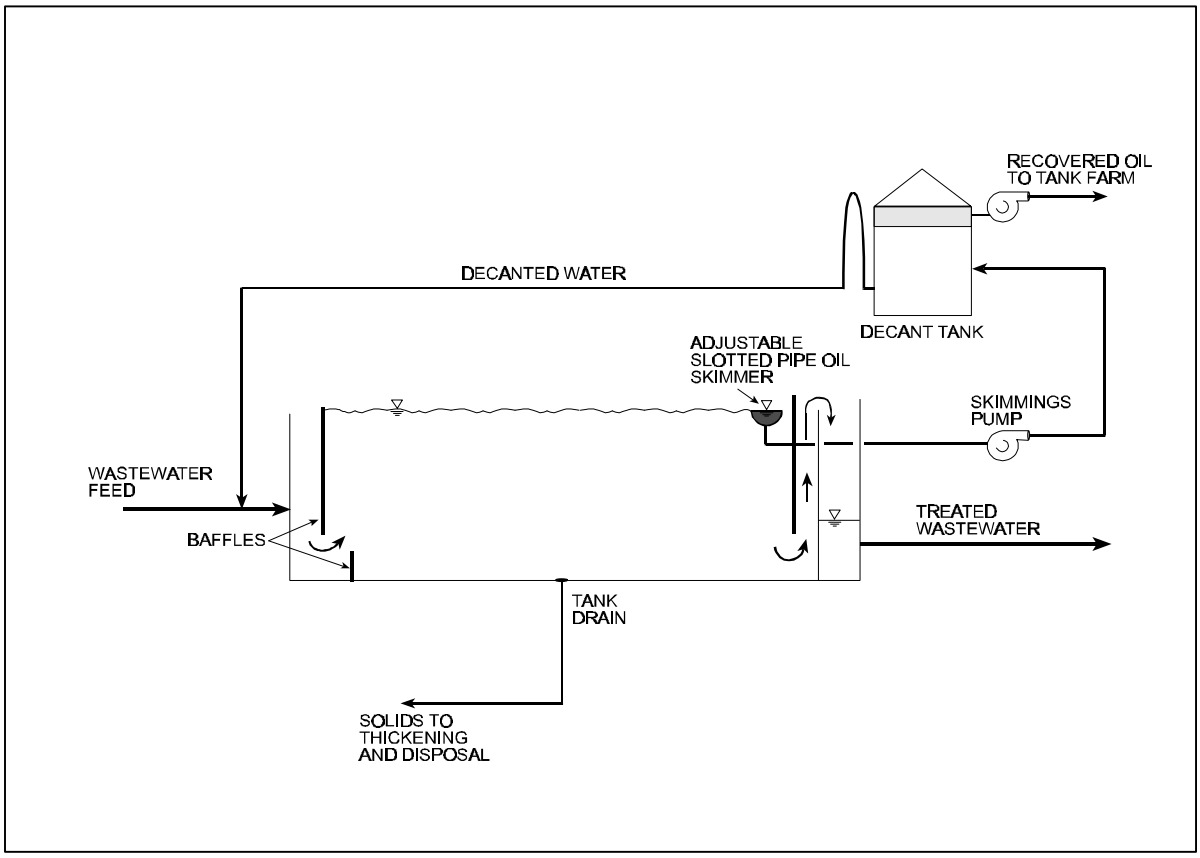

Figure 11
Conventional Gravity Separator

c) Effluent Chamber. The effluent chamber is also separated from the main chamber by upper and lower baffles. Wastewater flows under and over the baffles into the effluent chamber. From the effluent chamber, the treated water can be discharged to the sewerage system or to additional treatment if necessary.

5.5.1.2 Parallel Plate Separators. A typical parallel plate separator system is shown in Figure 12. Parallel plate separators function on the same principles as conventional gravity separators, but they require less space and are theoretically capable of achieving lower concentrations of effluent oil. The size of the unit is reduced by incorporating an array of closely spaced parallel plates within the separator chamber, thereby increasing the surface settling area. Flow through a parallel-plate unit can be two to three times that of an equivalently sized conventional separator. The oil is removed by passing the wastewater at laminar velocity through the pack of closely spaced plates, which are constructed at various inclines ranging from 45 to 60 degrees. These oil droplets rise and are trapped along the bottom of the plates. The oil droplets coalesce and gradually move upward along the bottom of the plates, eventually collecting at the surface of the tank. The plates aid in separation in the following ways:

a) Preventing short-circuiting of the oily waste

b) Increasing effective settling area

c) Enhancing contact/agglomeration of oil particles

Suspended solids settle to the bottom and are collected in a sludge well. From the well, sludge is pumped or withdrawn by gravity to waste. If sludge transfer is by gravity displacement, an automatic valve is usually provided. The plates in parallel-plate separators may be made of an oleophilic (oil attracting) material, such as polypropylene, fiberglass, or nylon, to promote coalescence of oil droplets. For this reason, the units are sometimes referred to as coalescing plate separators. Coalescing separators are usually recommended only for light oil loadings when a higher level of oil removal is required, the wastewater stream contains minimal solids concentrations, and the facility is committed to the additional maintenance procedures required to keep the coalescing pack free of debris. The plates may also be constructed in a corrugated

configuration with alternate troughs and ridges, such as in the so-called Corrugated Plate Interceptor (CPI).

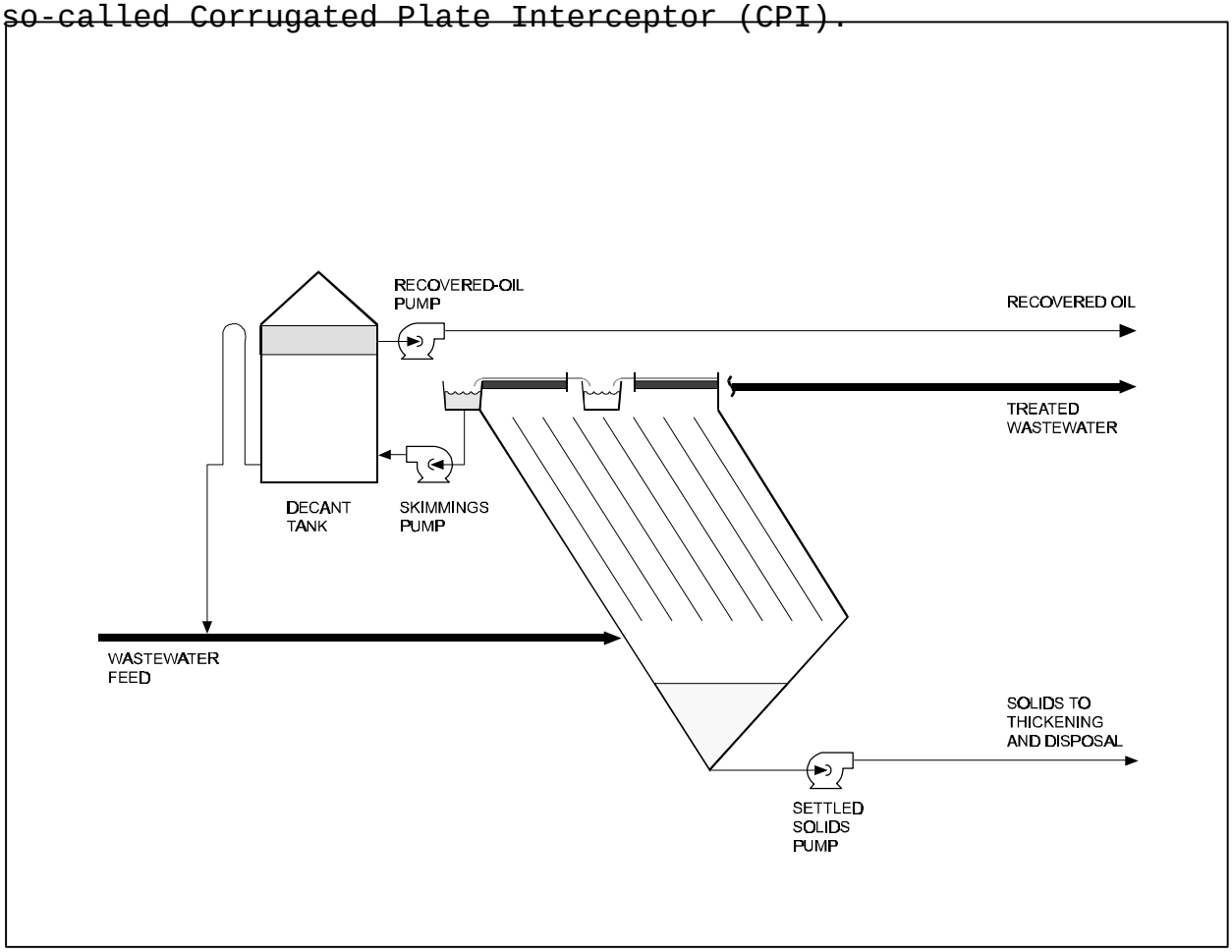

Figure 12
Parallel Plate Separator

5.5.2 Air Flotation Separators. In the air flotation process, separation of both oil and solid particles is brought about by introducing fine air bubbles into the liquid waste stream. The bubbles attach to the particulate matter and oil droplets, and the buoyant force of the air bubbles causes both particles and small oil droplets to rise to the surface. The oil/solids/air bubble mixture forms a froth layer at the surface, which is skimmed away.

A typical air flotation system is shown in Figure 13. The removal efficiency of air flotation separators for free oil is similar to that of gravity separators. However, air flotation units can also remove dispersed oil droplets in the 40 to 150 micron size range. The addition of coagulants, such as salts of iron and aluminum with or without organic polyelectrolytes, may further enhance the effectiveness of the air flotation process in removing emulsified oil.

Adequate laboratory or pilot studies are necessary, and adequate justification for the additional maintenance requirements should be documented before selecting an air-flotation unit for oil-water separation. Criteria for design of these units are provided in the EPA Manual 625/1-79-001, Process Design Manual for Sludge Treatment and Disposal and will not be described further herein.

5.5.3 Treatment of Emulsified Oil

5.5.3.1 Destabilization. Treatment of oil emulsions is usually directed toward destabilizing the dispersed oil droplets, causing them to coalesce and form free oil. The process typically consists of rapidly mixing coagulant chemicals with the waste-water, followed by gentle mixing (flocculation). The agglomerated oil droplets may then be removed by gravity or flotation.

5.5.3.2 Chemical Processes. Alternative chemical emulsion breaking processes include either the addition of acid (acid cracking), iron or aluminum salts (coagulation), or chemical emulsion breakers. In acid cracking, the pH is reduced to approximately 3 to 4, so the wastewater must be neutralized after oil-water separation. The use of iron or aluminum salts with or without polyelectrolytes may be less costly, but produces additional solids from the chemical precipitates. Proprietary chemical emulsion breakers are very effective, but they are more costly than iron or aluminum salts. A number of proprietary emulsion breakers are available through specialty chemical suppliers. Different products should be evaluated through bench-scale tests to determine which is most effective in a particular application.

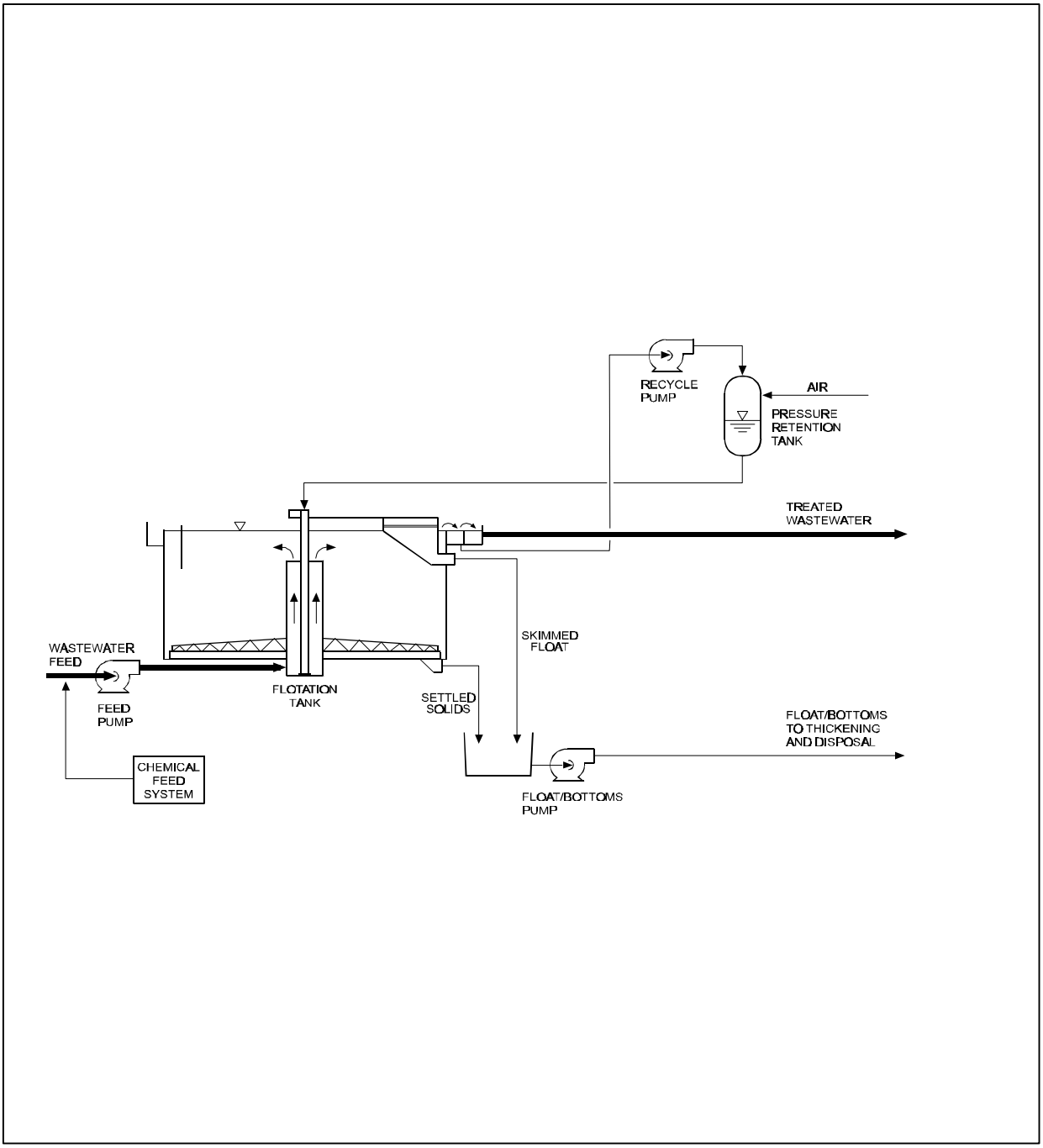

Figure 13
Dissolved Air Flotation

Some factory manufactured OWSs are designed with emulsion breaking chambers where chemicals are added and mixed. Otherwise, emulsion breakers should generally be added to the wastewater as far upstream of the OWS as practical. Further guidance in the treatment of emulsions is given in API Publication 421.

5.5.3.3 Mechanical Impingement and Filtration Processes. Other methods for removing emulsified oil include mechanical impingement devices and filtration. Representative of the former are the so-called coalescing filters and the cartridge-type emulsion breakers that are used as the final step in the Fram oily water separation system (following solids filtration or sedimentation and free oil removal). The Fram type cartridge unit contains a medium containing numerous small (25 microns), irregular, continuous passages through which the wastewater flows. The emulsion is broken by impingement of the oil droplets on the surface of the medium. The cartridge can be backwashed and/or replaced. Coalescing-type separators are recommended only for light oil loadings when a higher level of oil removal is required, the wastewater stream contains minimal solids concentrations, and the facility is committed to the additional maintenance procedures required to keep the unit free of debris.

Pressure filters may also be used to remove dilute concentrations of mechanically emulsified oil, usually as a polishing step downstream of gravity or flotation units. Activated carbon, other proprietary solid phase sorbents, or bentonite clay/anthracite are typically used as the media. Application of filters at military installations is expected to be extremely rare, so the design of these units is not covered herein.

5.5.4 Treatment of Dissolved Oil. Treatment of dissolved oil is also not normally practiced at military bases. Dissolved oil that might be present would be expected to be removed by the biological treatment processes employed by the FOTW or POTW to which the wastewater is discharged. Where pretreatment of dissolved oil at an upstream location is required, adsorption would be the probable method of choice. There are other treatment technologies such as membrane filtration and advanced oxidation techniques, but these technologies are rarely cost effective compared to adsorption or biological treatment.

5.6 Design of OWSs. Design of conventional and parallel-plate OWS systems requires proper characterization of the wastewater, establishment of the design flow, sizing of the

separator, and proper flow attenuation/flow equalization of the influent. The designer should work to identify the user's needs and the capability of any vendor-supplied equipment. These aspects of system design are discussed in the following paragraphs.

5.6.1 Wastewater Characterization. If possible, the wastewater to be treated should be analyzed for total oil and grease using conventional methods given by EPA, Standard Methods, or American Society for Testing and Materials (ASTM). In addition, the free, emulsified, and dissolved oil fractions should be determined by the method described in API Publication 421 referred to in par. 5.2.3. In the absence of data, a design globule diameter of 150 microns can be assumed for the design of conventional separators and 60 microns for parallel-plate separators.

As indicated previously, although OWSs are designed to remove free oil they also remove solids. Therefore, the solids content of the wastewater is important in overall system design. Analyses should include TSS, volatile suspended solids (VSS), and settleable solids. These analyses will help determine the amount and frequency of settled materials that will need to be removed from the bottom of the OWS and the advisability of providing grit removal upstream of the OWS.

Other wastewater characteristics important in the design of OWSs are the specific gravities of the oil and water phases and the absolute viscosity of the wastewater, both at the minimum design temperature. Wastewater temperature has a major impact on the efficiency of the separator, with poorer separation occurring at lower temperatures. Separators are not designed to remove pollutants such as phenols, solvents, and heavy metals. These pollutants should be addressed by the use of pollution prevention techniques.

5.6.2 Site Considerations. The OWS should be designed to be readily accessible for maintenance and inspection. Visual inspection and the ability to probe for solids levels are critical to good operation. Aboveground units are the easiest to access for maintenance and inspection. If belowground units are used, they should have adequate access points for inspection and cleaning. Belowground units should also be installed with a liner and leak-detection system.

5.6.3 Establishing the Design Flow. The efficiency of separation also decreases when flow exceeds the design capacity

of the separator. Therefore, the design flow should be based on the maximum flow rate to be treated, including the addition of any future oily wastewaters and stormwater runoff. In determining peak flow rates, variations between shifts and daily and seasonal variations should be considered. Flow rates should be measured where the wastewater generating process already exists, or accurately estimated where it does not.

In some cases, establishing production-based wastewater generation rates may be useful for projecting future flows. For example, the maximum flow expected from an aircraft washing facility may be estimated from the expected washwater per aircraft multiplied by the maximum number of aircraft to be washed in a given period. If unit wastewater generation rates from another facility are used, differing conditions should be accounted for, such as differences in the type and size of aircraft and washing procedures.

Where high flows of short duration are to be handled, an alternative to constructing a larger separator is to separate or divert extraneous flows from the system. For example, an outdoor washrack could be curbed and provided with a manually controlled valve to allow storm runoff to be diverted to a separate drain during rainfall periods. In general, flow equalization upstream of an OWS is beneficial where the OWS would otherwise experience slug loads.

5.6.4 Design Criteria for Conventional Separators. The following parameters should be considered in the design of conventional OWSs:

a) Design flow

b) Minimum wastewater temperature

c) Wastewater specific gravity

d) Wastewater absolute (dynamic) viscosity

e) Wastewater oil-fraction specific gravity

f) Minimum globule size to be removed, usually 150 microns

g) Type and amount of detergents present in the wastewater and potential changes in future detergent use

h) The quantity of solids to be removed and handled

i) The effluent or pretreatment limits to be met

Design criteria should conform to criteria established by the API, as follows:

a) Horizontal velocity through the separator should be less than or equal to 3 feet per minute or equal to 15 times the rise rate of the oil globules.

b) Separator water depth should not be less than 3 feet.

c) The ratio of separator depth to separator width should typically be in the range of 0.3 to 0.5.

d) A minimum length-to-width ratio of 5 is recommended.

e) Where continuous service is required, a backup channel or unit should be provided.

For a step-by-step design procedure, refer to API Publication 421. MIL-HDBK-1005/9 also contains design information.

5.6.5 Design Criteria for Parallel-Plate Separators. Parallel-plate OWSs are furnished as pre-engineered, factory-assembled units. As such, designs vary by manufacturer, and vendor experience must be used in unit sizing and selection. In general, however, the parameters and procedures used for the design of parallel-plate separators are the same as for conventional separators, except that a smaller design globule diameter of 60 microns is usually assumed. The perpendicular distance between plates typically ranges from 0.75 to 1.5 inches (2 to 4 cm), and the angle of plate inclination from the horizontal typically ranges between 45 and 60 degrees.

Placement of the OWS to provide accessibility is particularly important for parallel-plate separators. Accessibility is essential for maintaining the parallel plates in the separation chamber, which may require frequent cleaning. Removal for cleaning with high-pressure cleaning equipment is the procedure of choice. If cleaning in place is used, a hose

connection and proper provisions to minimize worker health and safety risks should be provided. If high solids concentrations are present, it may be advisable to install a sedimentation basin upstream of the OWS.

5.7 Oil/Sludge Removal and Disposal. Sludges and oils that are not periodically pumped from separator holding tanks can render OWSs inoperative. Reliable oil removal from the surface of the separation chamber is a frequent problem with both commercially available units and custom-designed separators. Currently, the most satisfactory method involves suction removal by installation personnel using equipment normally used for cleaning catch basins. This equipment is commonly referred to as a “vacuum" or "vac-all” truck.

Oils and oily sludges removed from the OWS may be disposed of by reuse/recovery, incineration, sale by the Defense Reutilization and Marketing Office (DRMO), waste hauler, landfill, and land disposal. It is recommended that final disposal options be evaluated concurrently with oil/water separation methods and environmental requirements to establish the most cost-effective total system. The sludge may require regulation as a hazardous waste if levels of pollutants exceed RCRA or state hazardous waste levels. Further, a leaking OWS containing a hazardous waste can result in designation as a solid waste management unit (SWMU) and be subject to corrective actions under RCRA regulations (40 CFR Subpart F).

5.8 Guidance Documents. The following documents provide additional guidance in designing or selecting OWSs. Also refer to the References section in this handbook.

a) ETL 1110-3. Selection and Design of OWS at Army Facilities, Army Engineering and Technical Letter August 26, 1994. This ETL is a comprehensive design guidance document for OWS.

b) MIL-HDBK-1005/9. Industrial and Oily Waste Control.

c) API Publication 421. Design and Operation of Oil-Water Separators, American Petroleum Institute, 1220 L Street, Northwest, Washington, D.C. 22005, February 1990.

d) HQ USAF/CE Memorandum. Oil/Water Separators: Operation, Maintenance and Construction, October 21, 1994. This memo includes the Environmental Compliance Policy for OWS Operations, Maintenance, and Construction.

e) HQ AFCEE Pro-Act Fact Sheet. Oil/Water Separators, December, 1996. (Web Address: http//www.afces.brooks.af. mil/pro_act/main//proact4.htm).

Section 6: PACKAGE PLANTS AND SMALL FLOW TREATMENT SYSTEMS

6.1 General. Treatment systems handling less than 1.0 mgd (3.8 ML/d) are generally considered small flow treatment systems. Military bases often have remote facilities or groups of facilities serviced by small flow treatment systems. This section provides general information on designing for small flow treatment systems as well as information on specific systems that are not covered in the Primary Design Guidance Documents. Also included at the end of this section is a discussion on the proper use of garbage grinders and grinder pumps in collection systems feeding small flow systems and package plants.

6.1.1 Types of Small Flow Treatment Systems. The primary treatment systems used for small flow applications are package treatment plants, Imhoff tanks, septic tanks, mound systems, and waterless toilets. Filtration/reuse systems are sometimes added to Imhoff tanks or septic tanks when additional treatment of the effluent is necessary. WEF MOP 8 addresses Imhoff tanks. The remaining small flow treatment systems are described in this section.

6.1.2 Unique Characteristics of Small Flow Treatment Systems. Package plant units are generally modularly constructed steel units assembled onsite from factory-supplied, pre-assembled components. These treatment systems can provide treatment within a range of about 10,000 gpd up to approximately 1 mgd per treatment unit. For package plant systems, the principles of design do not differ from larger treatment plants, although the choice of equipment usually will. This difference usually stems from economies of scale: certain operations are economically feasible only on a large scale. Types and characteristics of package plant systems and a typical package plant layout are provided in this section.

In contrast, Imhoff tanks, septic tanks, mound systems, and waterless toilets are only applicable to very small flows. Small flow systems must make larger safety factor allowances for flow variation and temperature effects relative to total wastewater flows than larger treatment systems. While small flow systems inherently have less operational flexibility, they are capable of performing effectively and efficiently. Design criteria for septic tanks, mound systems, waterless toilets, and filtration/reuse systems are given below following the sections

on package plant systems. (See also Field and Laboratory Studies of Onsite Household Wastewater Treatment Alternatives, Hutzler et al., 1984; and Biological Wastewater Treatment: Theory and Applications, Grady and Lim, 1985.)

6.2 Package Plant Systems. These systems combine processes such as aeration, settling, and solids treatment in a single multicompartment tank. Potential savings result from design standardization and factory production.

6.2.1 Types of Treatment Processes. Refer to Table 8 for classification according to the biological process employed and other characteristics. Select the treatment type according to the biological process. Note that some treatment types require separate primary settling. See Figure 14 for a typical treatment plant layout and a flow diagram incorporating a secondary treatment activated sludge package unit.

6.2.2 Evaluation of Particular Packages. For most treatment types, competitive packages are available from different manufacturers. Evaluate proprietary features and performance by cross-checking with manufacturers and with operators at an actual installation. Use package plants certified by the National Sanitation Foundation. Refer to NCEL CR-70.11, Analysis of Wastewater Treatment and Disposal Systems for Advanced Bases.

6.2.3 Performance Certification. Specify requirements based on the evaluation described above. Specify the method of operation and performance testing and indicate the penalties for failure to comply, including conditions requiring removal or replacement.

6.2.4 Capacity Ranges. Typical population equivalents for various biological processes available from vendors or as package units are shown in Table 8. These systems, depending on their size, may be supplied either as skid-mounted assemblies, or as field assembled units from package parts supplied by a manufacturer. Table 8 also includes information about process types, as well as a description of units, disposal recommendations, aeration methods, and applications.

Table 8
Characteristics of Package Biological Treatment Units

Biological Process	Unit Processes Included in Package	Solids Disposal	Aeration Method	Return Activated Sludge	Approximate Population Served and Flow (1)	Application
Extended aeration(2) (activated sludge)	Aeration and final settling. Chlorine contact tank may also be included.	Digested solids to holding tank for truck disposal or to dewatering facilities.	Diffusion. Mechanical surface aerator.	By airlift or pump.	Up to 1,000 per unit. 0.12 mgd (0.45 ML/d) per unit.	Most advantageous for low population load and where only periodic attention can be given to equipment.
Complete mix (activated sludge)	Primary settling, aeration and final settling. In smaller units, chlorine contact tank and aerobic digester may be included in package.	To digesters if not combined in treatment unit. Digested solids to holding tank for disposal or dewatering.	Diffusion. Mechanical surface aerator. Turbine aerator.	By airlift or pump.	Up to 10,000 per unit. 1.2 mgd (4.5 ML/d) per unit.	Used in larger plants.
Step aeration(2) (activated sludge)	Aeration, final settling and aerobic digester. Chlorine contact tank may also be included.	Same as extended aeration.	Diffusion.	By airlift.	Up to 5,000 per unit. 0.6 mgd (2.3 ML/d) per unit.	Higher degree of treatment.
Contact stabilization (2)(activated sludge)	Same as step aeration.	Same as extended aeration.	Diffusion.	By airlift.	Up to 5,000 per unit. 0.6 mgd (2.3 ML/d) per unit.	Do not use.
Biofiltration	Primary and secondary settling, two-stage trickling filtration, and digestion.	Digested anaerobically in lower compartment of unit.	Natural ventilation or forced ventilation.		Up to 500 per unit. 0.06 mgd (0.23 ML/d) per unit.	Same as extended aeration.
Rotating biological contactor(3)	RBC with final settling tank.	To separate digestion unit, or to primary settling tank.	Disc rotation under partial submergence.	None.	Up to 1,000 per unit. 0.12 mgd (0.45 ML/d) per unit.	Simplicity makes very advantageous for small units. Entire package is operated by one motor.

(1)Flow rates shown are based upon average 120-gpcd (450-Lpcd) flow rate.
(2)Separate primary settling generally not required.
(3)Primary settling generally installed separate from package unit.

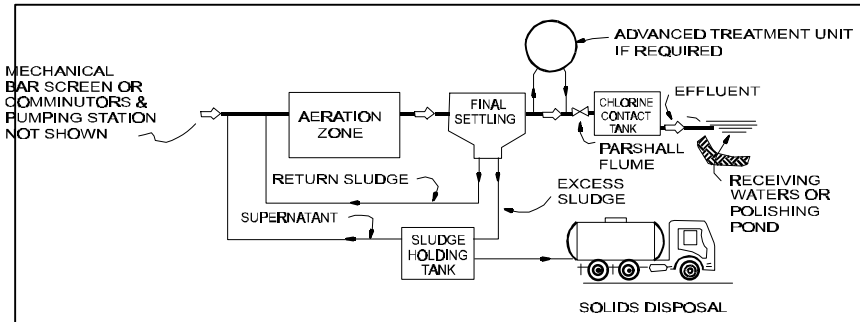

ACTIVATED SLUDGE
(EXTENDED AERATION)

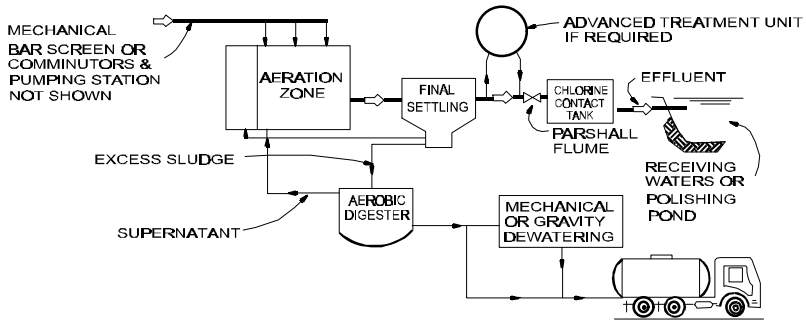

ACTIVATED SLUDGE
(STEP AERATION)

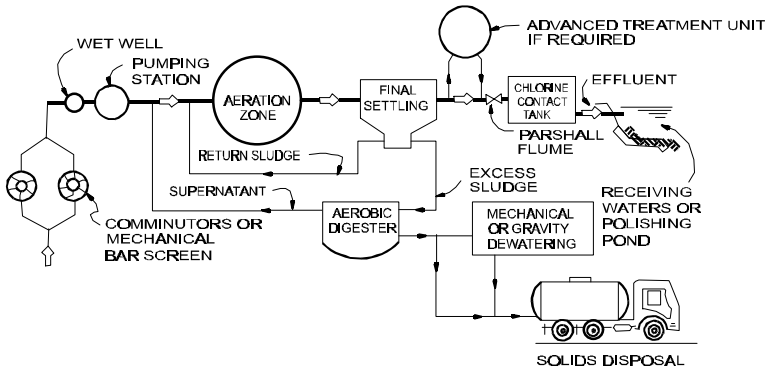

ACTIVATED SLUDGE
(COMPLETE MIXING)

Figure 14
Activated Sludge Package Plant Installations

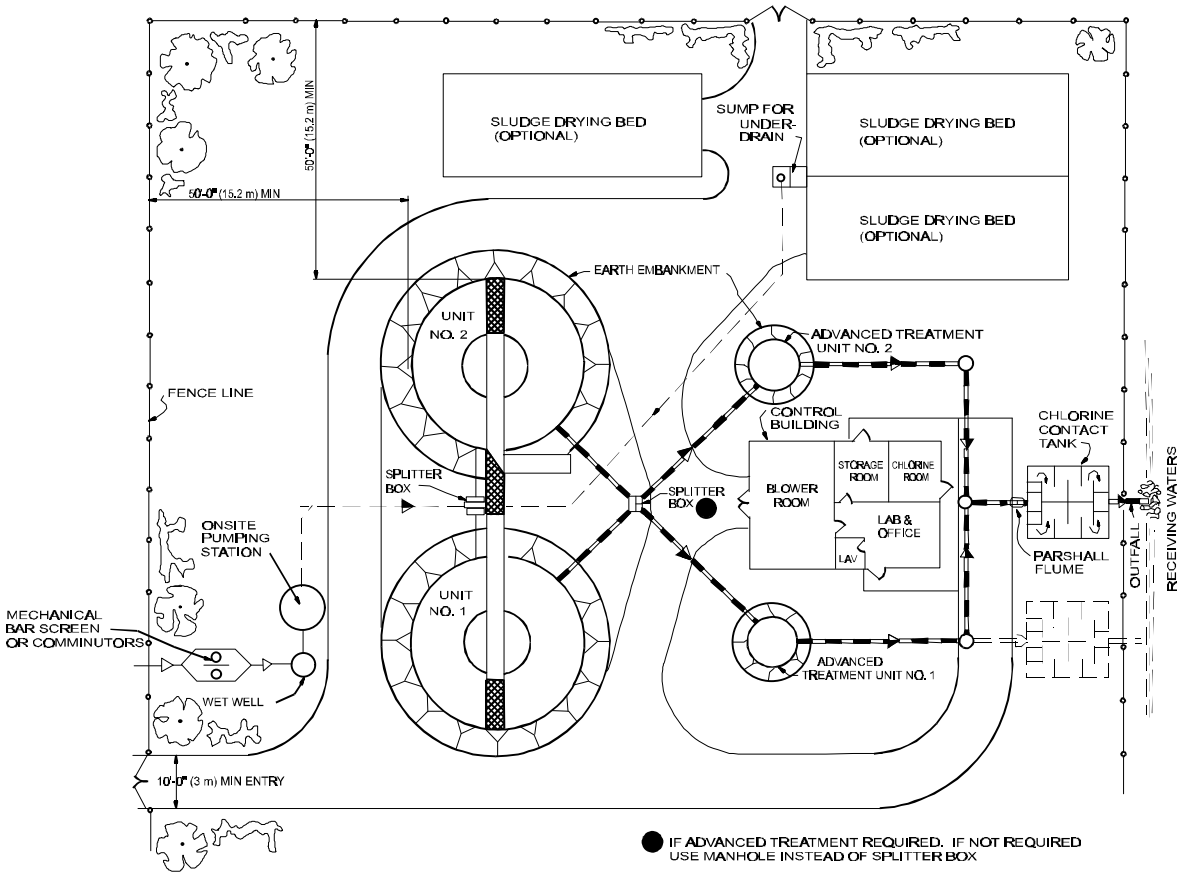

TYPICAL LAYOUT

Figure 14 (Continued)

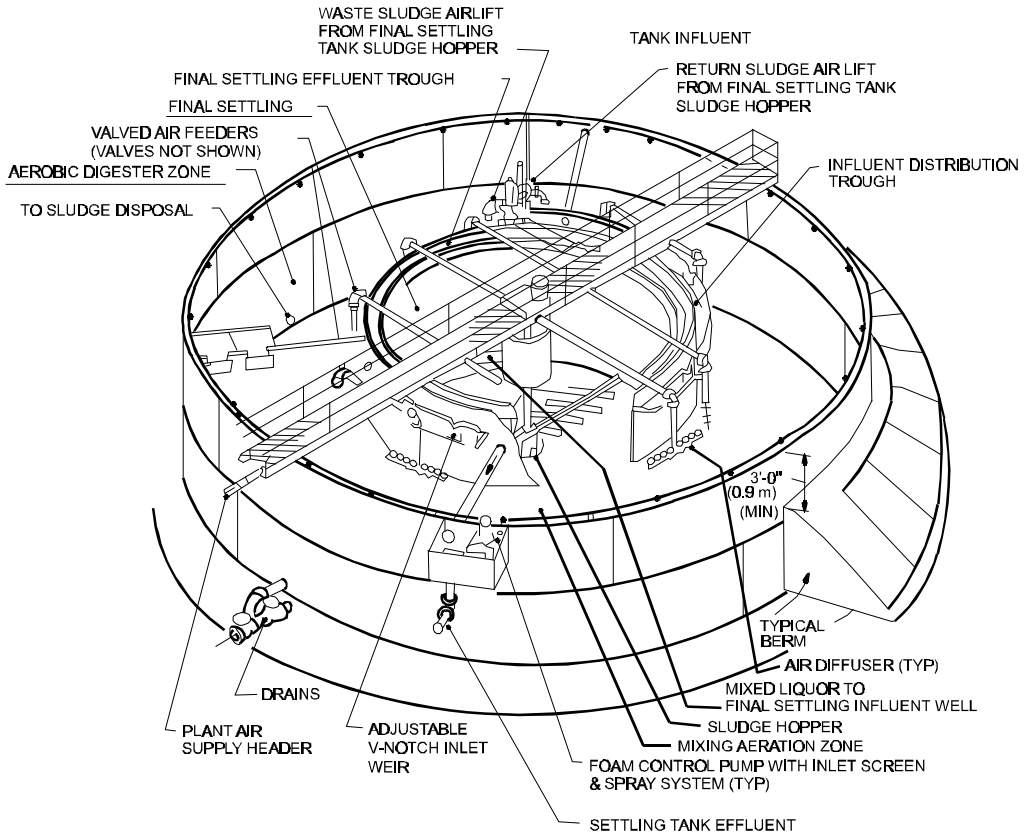

PACKAGE SECONDARY UNIT

(STEP AERATION SHOWN)

Figure 14 (Continued)

6.3 Septic Tank Systems. Septic tanks, with appropriate effluent disposal systems, are acceptable as a treatment system for isolated buildings or for single-unit residential buildings when permitted by regulatory authority and when alternative treatment is not practical. When soil and drainage characteristics are well documented for a particular site, septic tank treatment may be permanently feasible.

Because the septic tank treatment system is a biological process, and because it usually discharges directly above shallow groundwater, it is particularly important that toxic or hazardous chemicals are not discharged to it. Discharging industrial wastewater to septic tanks violates the underground injection provisions of the Safe Drinking Water Act (SDWA). In addition, grease and nonbiodegradable products should not be discharged into these systems since these products can clog system components.

For this reason, use of garbage grinders in domestic and light commercial facilities serviced by septic tank systems should be discouraged. For these users, food and other kitchen wastes should be disposed of entirely through the garbage collection system. Designers are cautioned to evaluate the sources of waste carefully before designing a septic tank system, and to advise upstream sewer users of appropriate discharges and source control to prevent improper releases to septic tank systems.

6.3.1 Size. Septic tanks perform settling and digestion functions and are effective in treating from 1 to 300 population equivalents of waste. (A population equivalent is considered to be approximately 100 to 120 [380 to 450L] gallons per capita per day of domestic strength wastewater.) Generally, septic tanks should be used only for 1 to 25 population equivalents, except when septic tanks are the most economical solution for larger populations within the above range. Minimum size will be at least a 500-gallon (1,900-L) capacity. In designing tanks, the length-to-width ratio should be between 2:1 and 3:1, and the liquid depth should be between 4 and 6 feet (1.2 and 1.8 m). (Refer to Figure 11 and see Military Standard Drawings No. 26-20-01 and 26-20-02 for details of construction.)

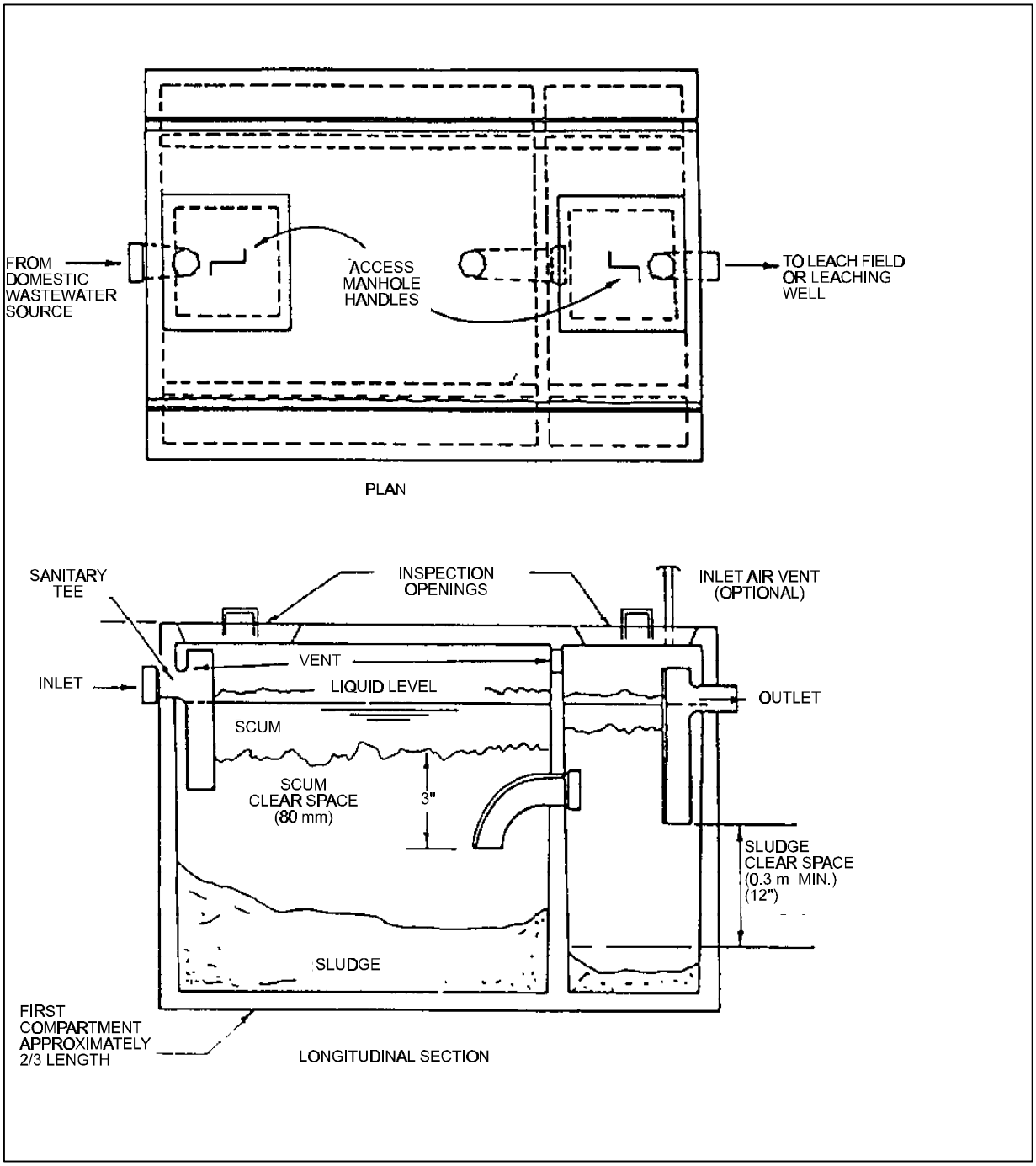

Figure 15
Typical Two-Compartment Septic Tank

6.3.2 Detention Time. Detention time depends largely on the method of effluent disposal. When effluent is disposed of in subsurface absorption fields or leaching pits, 24 hours of detention time based on average flows is required. The septic tank should be sized to provide the required detention (below the operating liquid level) for the design daily flow plus an additional 25 percent capacity for solids storage. If secondary treatment such as a subsurface sand filter or an oxidation pond is provided, this period can be reduced to 18 hours. Open sand filter treatment can further reduce detention time to 10 to 12 hours.

6.3.3 Effluent Disposal. Absorption field and leaching well disposal should normally be limited to small facilities (less than 50 population equivalents). If the total population is over 50, then more than one entirely separate field or well would be acceptable. For 10 or more population equivalents, discharge of effluent will be through dosing tanks, which periodically discharge effluent quantities near 80 percent of the absorption system capacity.

6.3.3.1 Subsurface Absorption. Subsurface absorption can be used in conjunction with septic tank treatment when soil conditions permit. Percolation tests should be performed as required by the U.S. Public Health Service, and the groundwater table at the highest known or anticipated level should not reach any higher than 2 feet (0.6 m) below the invert of the lowest distribution line.

Absorption fields normally consist of open-joint or perforated distribution pipe laid in trenches 1 to 5 feet (0.3 to 1.5 m) deep and 1 to 3 feet (0.3 to 0.9 m) wide. The bottoms of the trenches are filled with a minimum of 6 inches (15 cm) of 3/4- to 2-1/2-inch rock or gravel (Figure 16). The perforated distribution pipe is laid on top of this rock, and the open joints between pipe lengths are covered to prevent clogging. More rock is placed carefully over the pipe network, and then a semipermeable membrane is used over the rock layer to prevent fine, grained backfill from clogging the drainage zone. Distribution pipe may be spaced as close as 2 feet (0.6 m) if the rock beneath is deep, the subsoil porous, and distance to bedrock greater than 4 feet (1.2 m).

Generally, distribution pipelines are 3 to 6 feet (0.9 to 1.8 m) apart laterally and are no longer than 100 feet (30 m). Consult EPA 625/1-80-012, Process Design Manual for

Onsite Wastewater Treatment and Disposal Systems, for complete details and leach field special design information. Minimum depth of trench will be 18 inches (46 cm), with 12 inches (30 cm) of backfill. Invert slopes will be 0.3 percent when dosing tanks are used and 0.5 percent when not used. Soil absorption systems will be 100 feet (30 m) from water supply wells, 50 feet (15 m) from streams, 10 feet (3 m) from any dwelling or property lines. Soil testing is a required prerequisite for any subsurface disposal of waste. EPA 625/1-80-012 Chapter 3 specifies soil testing methodologies, including the standard Falling Head Percolation Test procedure used to estimate local percolation rates. Local and state regulations should also be consulted because they often provide meaningful guidance for the soil types in specific geographical areas.

6.3.3.2 Leaching Wells. Leaching wells can be used for septic tank effluent disposal where subsoil is porous. Although absorption beds are generally preferred, site characteristics and cost considerations may encourage the use of a leaching well. Wells are constructed with masonry blocks or stone with lateral openings and gravel outside to prevent sand from entering the well. If more than one well is required, space the wells at intervals with at least twice the diameter of a well as distance between well hole sides.

The percolation area is the area on the side and bottom of the hole for the leaching well. The bottom of a leaching well should be 4 feet (1.2 m) above seasonal high water. See Figures 17 and 18 and EPA 625/1-80-012.c.

6.3.3.3 Subsurface Sand Filters. Septic tank effluent can also be applied to subsurface sand filters. Subsurface explorations are always necessary. Clogging and installation costs are significant disadvantages. Where recirculatory sand filters are used, dose rate may range between 3 and 5 gallons per day per square foot (gpd/sq ft) (0.12 and 0.2 cubic meters per day per square meter [cu m/d/sq m]). Consult EPA 625/1-80-012; Intermittent Sand Filtration for Upgrading Waste Stabilization Pond Effluents, Harris et al., 1977; and Intermittent Sand Filter Design and Performance: An Update, Royayne et al., 1982, for appropriate procedures for site evaluation and design parameters.

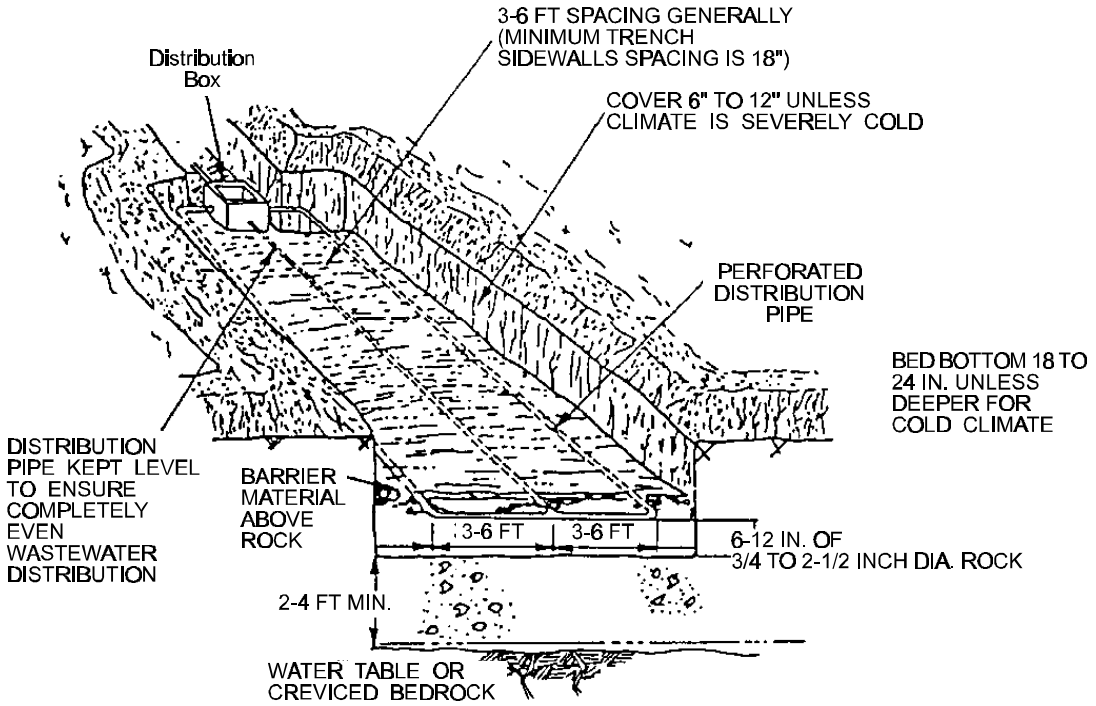

Figure 16
Subsurface Absorption System

6.3.3.4 Percolation Tests. In the absence of groundwater or subsoil information, subsurface explorations are necessary. This investigation may be carried out with shovel, posthole digger, or solid auger with an extension handle. In some cases the examination of road cuts or foundation excavations will give useful information. If subsurface investigation appears suitable, percolation tests should be made at typical points where the disposal field is to be located. Percolation tests determine the acceptability of the site and serve as the basis of design for the liquid absorption. Consult EPA 625/1-80-012 for percolation test procedures.

6.4 Mound Systems. Many installations are sited on low-lying plains, reclaimed swamps, or poorly drained areas. Saturated soil conditions or a high clay content, a high water table, shallow depth to bedrock, and slow percolation make ordinary soil disposal techniques unfeasible (see On-Site Treatment, Boyle and Otis, 1982). In these situations, the septic tank mound system may then be feasible.

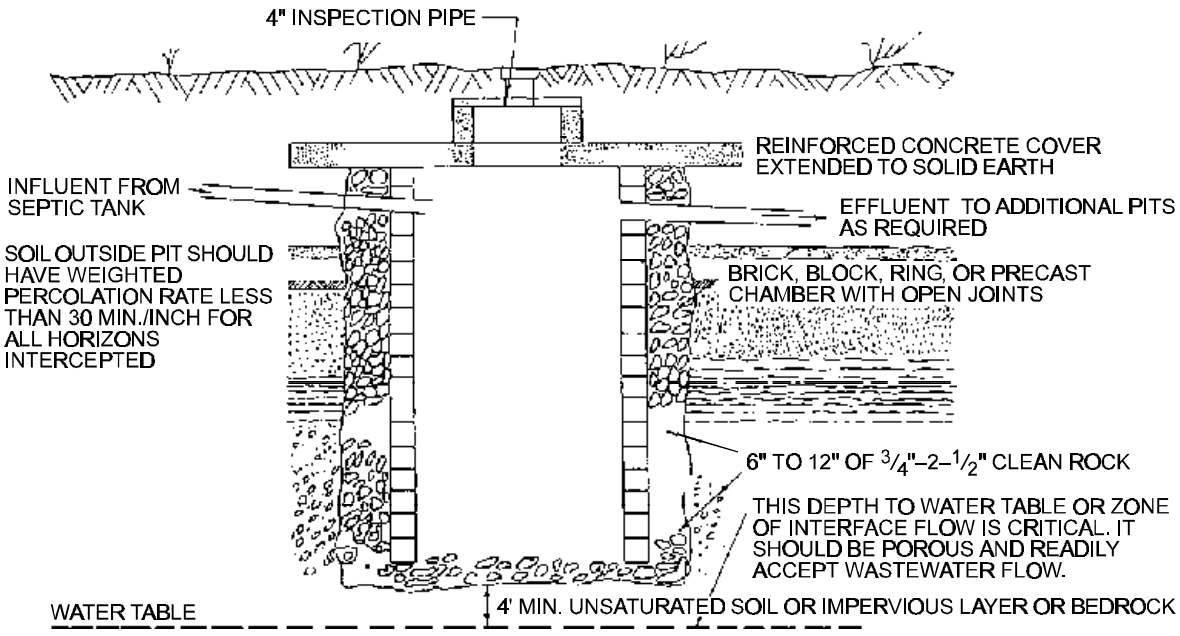

Figure 17
Seepage Pit Cross-Section

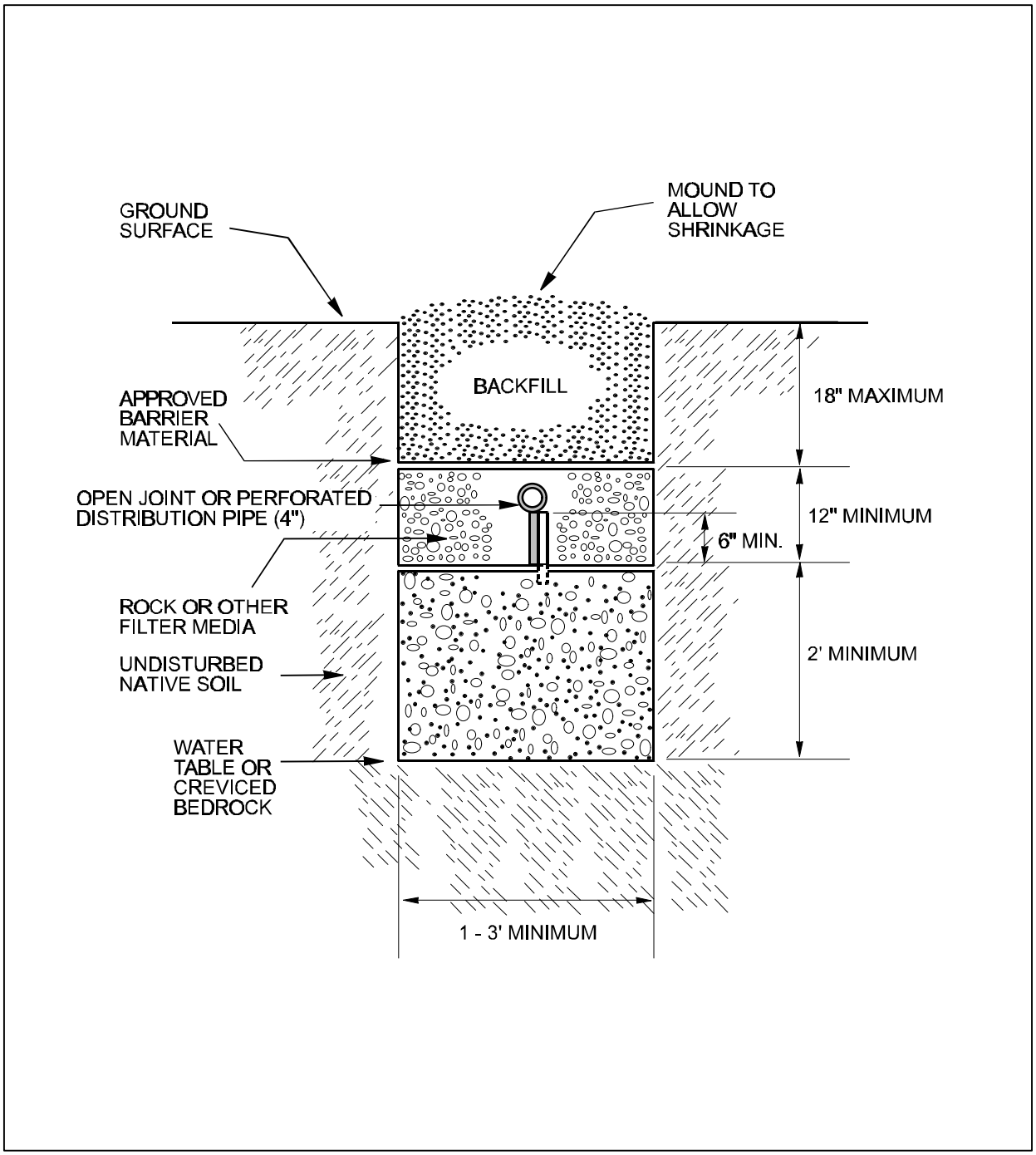

Figure 18
Leaching Field Cross-Section

6.4.1 Description. A typical mound system is shown in Figure 15. A siphon may replace the pump if the mound is located downslope. The mound itself consists of fill material, an absorption area, a distribution system, a cap, and a covering of topsoil. Effluent is dosed into the absorption area through the distributor piping. The fill material provides the major zone of purification before the cleansed effluent passes into the buried topsoil of the original soil line. The cap is of fill, deep enough to protect the piping; it should be sloped and contain sufficient silt and clay to encourage runoff of rainfall. The topsoil above is seeded with grasses to prevent erosion and encourage some evapotranspiration. In pervious soils above shallow bedrock, the mound should be deep enough to provide absorption of pollutants before they can infiltrate bedrock and enter groundwater.

6.4.2 Site Considerations. Table 9 summarizes soil and site factors that restrict mound systems. In using Table 9, percolation tests are usually run at 20 to 24 inches (50 to 61 cm) from the natural surface. As shown for slowly permeable soil, if the percolation rate is less than 60 minutes per inch (min/in.)(24 min/cm), the soil is permeable so that the slope of the site may be cautiously increased to keep effluents in the upper soil horizons. If the percolation rate is greater than 120 min/in. (48 min/cm), then the soil is so impermeable as to disallow use of a standard mound system. Soil characteristics, water table depth, and amount of large fragments dramatically influence mound design. Figure 19 illustrates a mound system using two trenches, while Figure 20 shows the bed absorption system. For further information on design criteria and installation, see EPA 625/1 80-012.

6.4.3 Depth to Pervious Rock. A minimum of 24 inches (61 cm) of unsaturated natural soil is required beneath the mount. This natural soil provides additional purification capacity and serves as a buffer in protecting the groundwater from contamination. It also reduces the amount of fill material needed for the mound, serving as a part of the unsaturated soil needed for purification.

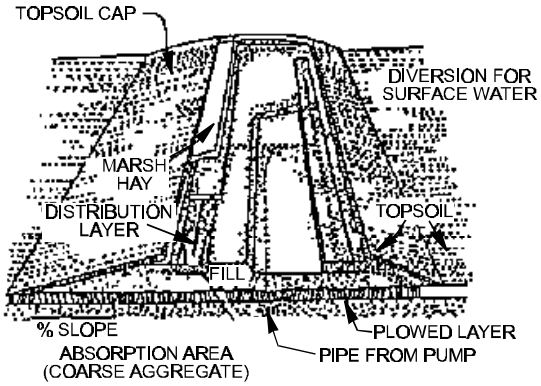

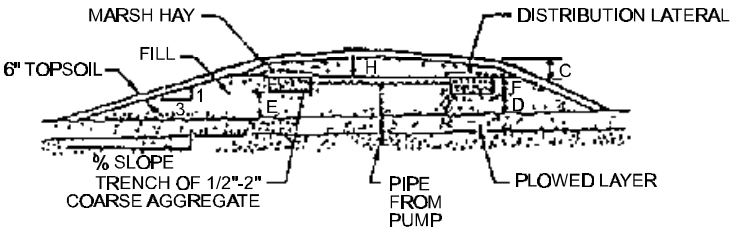

A detailed cross-section of a mound using trenches for the absorption area. Normally used on slowly permeable soil sites.

D or E = Fill depth (1' minimum if water table is 2' beneath soil surfaces)
F = Trench or bed depth (minimum 9", 6" below pipe)
C = Frost protection cap, runoff promoter
H = Cap apex, minimum 1.5'

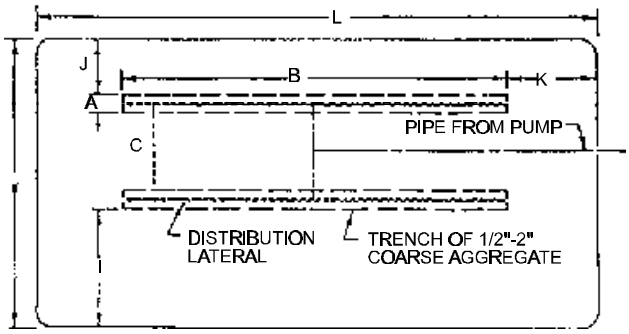

A = Bed or trench width
B = Bed or trench length
C = Spacing between trenches
K = End slope length
I = Downslope
J = Upslope
L = Length

A detailed plan view of a mound using trenches for the absorption area. This system recommended for slowly permeable soils with high water tables.

Figure 19
Mound System – Trenches

Table 9
Soil and Site Factors That Restrict Mound Systems

Restricting Factors	Slowly Permeable Soils	Permeable Soils with Pervious Bedrock	Permeable Soils with High Water Table
Percolation rate(a)	60-120 min/in. (24 to 48 min/cm)	3-60 min/in. 1.1 to 24 min/cm)	3-60 min/in. (1.1 to 24 min/cm)
Depth to previous rock	24 in. (61 cm)	24 in. (61 cm)	24 in. (61 cm)
Depth to high water tables	24 in. (61 cm)	24 in. (61 cm)	24 in. (61 cm)
Depth to impermeable soil layer or rock strata	60 in.(b) (152 cm)	60 in. (152 cm)	60 in.(b) (152 cm)
Depth to 50% by volume rock fragments	24 in. (61 cm)	24 in. (61 cm)	24 in. (61 cm)
Maximum slope	6%	6-12%(c)	6-12%(c)

(a) Percolation test depth at 24 inches, 12 inches, and 24 inches (61 cm, 30 cm, and 61 cm) for slowly permeable, shallow soils, and high water table soils, respectively, unless there is a more restrictive horizon above. If perched water is at 24 inches (61 cm), test depth should be held to 16 inches (40 cm).

(b) See discussion in text (par. 6.4.5).

(c) For percolation rate of 3 to 29 min/in. (1.1 to 11 min/cm), maximum slope is 12 percent and for 30 to 60 min/in. (12 to 24 min/cm), maximum slope is 6 percent.

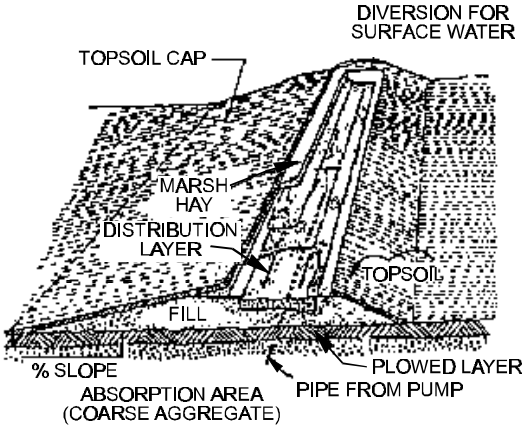

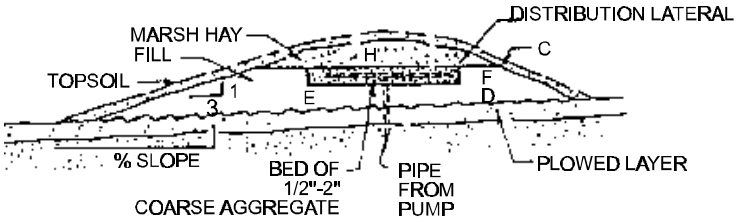

A detailed cross-section of a mound using a bed for the absorption area. Normally used on shallow permeable soils with creviced bedrock or permeable soils with high water tables.

D or E = Fill depth (1' minimum if water table is 2' beneath soil surfaces)
F = Trench or bed depth (minimum 9", 6" below pipe)
C = Frost protection cap, runoff promoter
H = Cap apex, minimum 1.5'

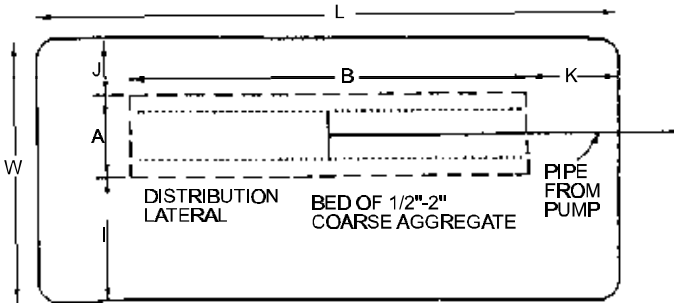

A = Bed or trench width
B = Bed or trench length
K = End slope length
I = Downslope
J = Upslope
L = Length

A detailed plan view of a mound using a bed for the absorption area.

Figure 20
Mound System – Beds

6.4.4 Depth to High Water Table. In mound systems, the absorption area is raised above the natural soil to keep the bottom of the trenches as least 2 feet (53 cm) above groundwater, as well as creviced or porous rock or relatively impermeable soils. High water tables can be determined by direct observation or by soil mottling. Occurrence of grey and red soil mottling phenomena can be used to indicate periodic saturation with water. However, lack of mottling does not always mean that seasonally perched water does not occur. Looking at mottling is meaningful, but direct observation is preferable if there is any doubt.

6.4.5 Depth to Impermeable Soil Layer or Rock Strata. The depth to impermeable soil or rock strata can vary over a range (see Figures 19 and 20). The optimum distance will vary for a given site. Provide sufficient area so that the effluent can move away from the mound. Otherwise, effluent will build up in the mound and cause seepage out the toe of the mound.

Climatic factors, soil permeability, slope, and system configuration affect this distance. Slowly permeable soils require more area to remove the effluent from the mound than do permeable soils. Frost penetration reduces the effective area for lateral movement; thus, in warmer climates, depth requirements are not as great as for colder climates.

Level sites require shallower depths than do sloping sites, as more area is available for effluent dispersal since the effluent can move in several directions. Less depth is required for long narrow mounds than is required for more square systems because the square system concentrates the liquid into a smaller area.

6.4.6 Depth to 50 Percent Volume Rock Fragments. Rock fragments do not assist in purification and disposal of effluents. They cause the effluent to be concentrated between the fragments. This may lead to saturated flow and, thus, poorer purification. If the soil contains 50 percent rock fragments by volume in the upper 24 inches (61 cm) of soil, then there is only half the soil available for purification and disposal of the effluent. Depths greater than 24 inches (61 cm) should be used if the soil beneath the mound contains more than 50 percent by volume of rock fragments. This is especially true for permeable soils over creviced bedrock and in areas where the high water table may intersect a potable water supply.

6.4.7 Slopes. Site selection is very important. The crested site is the most desirable because the mound can be situated such that the effluent can move laterally down both slopes. The level site allows lateral flow in all directions but may present problems because the water table may rise higher beneath the mound in slowly permeable soils. The most common site is the sloping site, where all the liquid moves in one direction, away from the mound. However, proper design can overcome this limitation, especially in the less permeable soils. Place the mound upslope and not at the base of the slope. On a site where there is a complex slope, situate the mound such that the liquid is not concentrated in one area of the downslope. Upslope runoff should be diverted around the mound.

Mounds require more stringent slope specifications than conventional systems because of their reliance on lateral movement of effluent through the upper soil horizons. Lateral movement becomes more important as soil permeability becomes less. Thus, on more slowly permeable soils, the maximum allowable slopes are less. For the more permeable soils (3 to 29 min/in. [1.1 to 11 min/cm]), slopes up to 12 percent should function without surface seepage because lateral movement is not so great. For tighter soils (30 to 120 min/in. [12 to 48 min/cm]), slopes should not exceed 6 percent. For sloping sites, the downslope distance (I) must be lengthened and the upslope distance (J) shortened. Table 10 may be used for this calculation.

Table 10
Correction Factors for Mounds on Sloping Sites

Slope (percent)	Downslope (I) Correction Factor	Downslope (J) Correction Factor
0	1.0	1.0
2	1.06	0.94
4	1.14	0.89
6	1.22	0.86
8	1.32	0.80
10	1.44	0.77
12	1.57	0.73

6.4.8 Special Siting Considerations. Construction of mound systems as well as conventional systems is not recommended in flood plains, drainage ways, or depressions. Generally, sites with large trees, numerous smaller trees, or large boulders are unsuitable for the mound system because of the difficulty in preparing the surface and the reduced infiltration area beneath the mound. As with rock fragments, tree roots, stumps and boulders occupy space, thus reducing the amount of soil for proper purification. If no other site is available, then it is recommended to cut the trees off at ground level, leaving the stumps. A larger mound area may be necessary if too many stumps are involved for sufficient soil to be made available to accept the effluent. Separating distances should be considered between the toe of the fill and the respective features, such as a building, well, slope, or stream. When the mound or fill is located upslope from a building or other features on soils with slow percolation rates or slowly permeable subsoil layers, the separating distances should be increased.

6.4.9 Basal Area Calculation. The natural soil-fill area interface is the basal area. The effluent is accepted from the overlying mound fill through this area into the subsoil beneath. For level sites, the basal area equals the mound area. For sloping sites, the basal area downslope from the bed or trenches is used in basal loading rate calculations. It includes the area enclosed by B*(A+C+I+J)for a trench system (Figure 15) or B*(A+I+J) for a bed system (Figure 16). The percolation rate for the natural soil will determine how much area is required. For percolation rates applicable for mound systems, the design basal loading rates are provided in Table 11.

Table 11
Percolation Rates and Corresponding Design Loading Rates

3 to 29 min/in. (1.1 to 11 min/cm)	Use	1.2 gpd/sq ft (0.049 cu m/d/sq m)
30 to 60 min/in. (12 to 24 min/cm)	Use	0.74 gpd/sq ft (0.03 cu m/d/sq m)
60 to 120 min/in. (24 to 48 min/cm)	Use	0.24 gpd/sq ft (0.0098 cu m/d/sq m)

6.5 Waterless Toilets

6.5.1 Humus "Composting" Toilets. The U.S. Forest Service and several manufacturers have developed several types of humus toilets (see The Composting Option for Human Waste Disposal in the Backcountry, Fay and Walke, 1975, and Utilization of Earthworms and Micro-organisms in Stabilization and Detoxification of Residue Sludges from Treatment of Wastewaters, Hartenstein and Mitchell, 1978). All humus toilets are watertight and depend upon microbiological decomposition for their reduction in volume and their destruction of pathogens. The patented "Clivus Multrum" is the forerunner of the modern composting toilet. The Clivus Multrum essentially involves only a toilet seat and a large sloped container with floor tilted at 33 degrees. This allows excreta to aerate and to gradually move to the base of the chute toward an access hatch. Excess moisture evaporates through a 6-inch (150 mm) roof vent. The system depends upon the user depositing peat moss or soil into the chute periodically. Kitchen waste, toilet paper, shredded paper or other biodegradable waste should also be added regularly.

After about 3 years, and once each year thereafter, a small amount of "humus-like" compost may be removed from the access port and used as fertilizer. Humus toilets are simple, very efficient, and easy to install. However, they are moderately expensive, are space intensive, and also require a slope or must be installed on the second floor. They should be seriously considered in mountainous terrain or when buildings are built on slopes. Smaller box-like units have been designed and installed in Scandinavia and England but these require an electric heater (see New Options for a Sewerless Society, Liech, 1976.)

6.5.2 Chemical Toilets. Chemical toilets are usually manufactured of fiberglass and are inexpensive to install and maintain. The chemicals used have a high pH and have been known to cause minor burns. A fragrance is usually added to mask odors because no biological degradation occurs between cleanings. After cleaning, pumper trucks usually transport the treated wastes to a sewage treatment plant. Chemical units are less desirable than humus units because they require not only greater energy costs but also constant maintenance and hauling to a treatment plant.

Another chemical treatment method is to use mineral oil as the transfer liquid. These units are common on cargo vessels, and at national parks, rest areas, and gas stations. They do have some advantage over other chemical toilets. Wastes are pumped to a central holding tank, undergo considerable degradation during storage, and are more aesthetically acceptable. However, their maintenance requires highly trained personnel. Ozonation units that couple anaerobic and aerobic treatment and ozone saturation have been produced by several firms. However, such units installed in California have proven to be expensive.

6.5.3 Aerated Pit Latrines. Military units of small size assigned to the field or to relatively remote outposts may use aerated pit latrines. These latrines are improved versions of the "privy." The pit may be excavated, using a backhoe or hand labor. Usually the pit walls are supported by 2 x 4 lumber and lagging. The privy structure is best designed to allow easy transport to a new location. It may be uncoupled from the pit wall supports and carried to another location when the pit is filled with waste to within 2 feet (0.6 m) of the ground surface. Once the structure has been removed, the remaining pit is buried with topsoil and seeded to grass.

Some modern designs use passive solar panels to produce a rising current of warm air, which passes out of a screened vent pipe. Screened openings are provided at the base of the privy structure to allow cool air to move laterally across the top of the pit, up, and then out of the vent. Latrines can be operated as composting toilets if leaves, wood chips, and pine straw are added to the excreta. If well designed and responsibly maintained, the aerated pit latrine will not harbor vectors nor will odors accumulate. For further details, see Excreta Control for Rural Area, Wagner and Lanoix, 1958.

6.6 Filtration/Reuse Systems. To meet stricter standards, improved intermittent sand filters have been developed to treat wastes from Imhoff tanks or septic tanks. The system developed includes a recirculation tank and an open sand filter (Figure 21). A clock mechanism and pump ensure a recirculation rate that results in fresh liquid being dosed onto the surface of the sand filter. Solids are partially washed onto the sand and kept odor-free. Float controls provide override of timer clocks should flows increase to near overflow levels before the clock sets pumps into action. Dosing is through troughs rather than through central pipe and splash block. Sand size is coarse

(0.0118 to 0.059 inch for the top 2 feet [0.6 m] of filter) to allow a dose rate of 5 gpd/sq ft (0.2 cu m/d/sq m).

6.6.1 Recirculation Tank. The recirculation tank receives some underdrainings from the filter and mixes this with the septic waste. The recirculation tank should be between one-quarter and one-half the size of the Imhoff or septic tank. A simple movable gate directs flow from the drain either to the recirculation tank or to chlorination or other further treatment and ultimate discharge. A tee turned upside-down and a rubber ball suspended in a stainless steel basket under the open end of the tee will also provide adequate flow control.

6.6.2 Recirculation. Recirculation is kept between 3:1 to 5:1. Pumps are set to dose every 2 to 3 hours and to empty the recirculation tank. The recirculation pumps are sized so that 4 to 5 times the amount of raw sewage is pumped each day. Duplicate, alternative pumps are required. Sand and gravel are placed carefully so as not to crush the plastic or tile pipe underdrains. Usually two separate sand filters are built so that filters can be raked each week and allowed to completely aerate. Prior to winter operation, the top 2 inches (5 cm) of sand on the filters is replaced. Since these filters are placed on the surface, they should be surrounded by a fence and landscaped. Effluent will be of good quality, with biochemical oxygen demand values ranging between 1 and 4 mg/L. In the winter, ammonia may range from 40 to 50 mg/L. Pathogens are practically completely removed.

6.6.3 Design Information. Design concepts are detailed in Renovation of Secondary Effluent for Re-use as a Water Resource, Kardos et al., 1974; On-Site Sewage Treatment, American Society of Agricultural Engineers (ASMAE), 1984; Ecological Aspects of Used Water Treatment, Curds and Hawkes, 1975; and Alternative Wastewater Treatment, Eikum and Seabloom, 1982.

6.7 Garbage Grinders and Grinder Pumps. The following information is provided for consideration by the designers of small flow and package plant treatment systems.

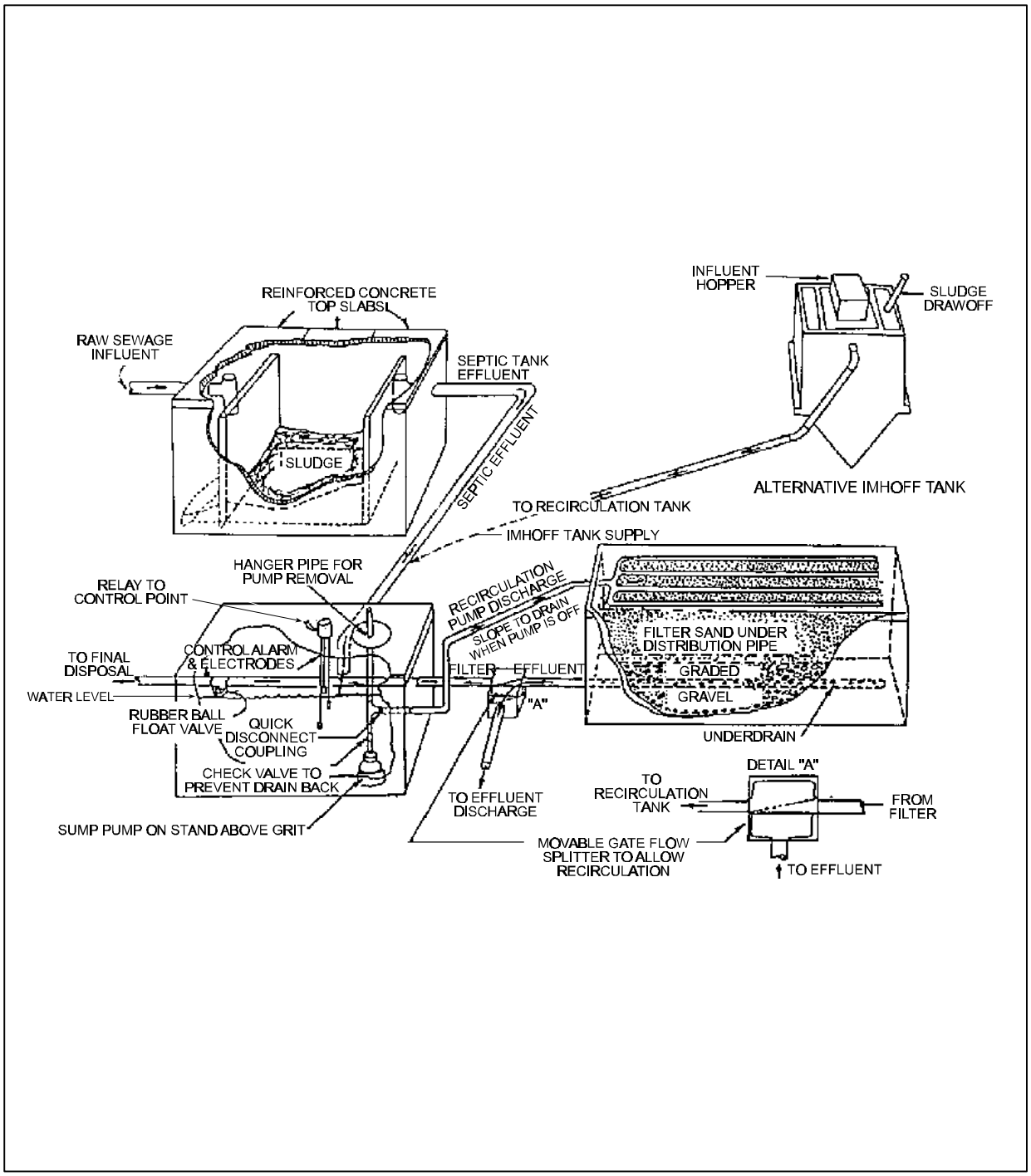

Figure 21
Filtration and Reuse Systems

6.7.1 Garbage Grinders. Garbage grinders are commonly used to dispose of large portions of solid waste created by food service facilities. Such facilities have created problems in the wastewater collection and treatment systems serving military housing areas. Garbage grinders that discharge into public wastewater collection and treatment facilities generally present few problems. However, when discharge is to a relatively small package wastewater treatment plant, a lagoon system, or especially to septic tank and soil absorption/leach field systems, problems can occur. These problems include overloading of the treatment system, clogging of sewer lines or leach field distribution lines, and grease ball formation in the collection and treatment systems. Designers should discourage the use of garbage grinders for users discharging into small flow treatment systems.

6.7.2 Grinder Pumps. Grinder pumps are appropriate for use where small flows (less than 200 gpm) are encountered and where a high degree of solids is discharged into a package-type activated sludge wastewater treatment plant. Typically a grinder would be used to serve one or two facilities or residences and to pump the wastewater into a larger force main or into a gravity system feeding a package plant system. Grinder pumps are not recommended for systems that discharge to septic tank and other small flow treatment systems since they may suffer from the same problems that garbage grinders can cause.

For larger systems, the grinder pump station should be equipped with all the features of a larger pump station. It should be a duplex system with alternating pumps for reliability operating on a float control system. The control panel should be protected against lightning strikes, have remote alarm capability and an emergency generator connect capability. Grinder pumps shall be manufactured with all metal components and have high-strength, reversible cutter rings. Grinder pumps should be equipped with a quick-disconnect, lift-out assembly so pumps can be removed without the need for disconnecting the discharge piping or for entering the wet well.

Section 7: LAGOON SYSTEMS

7.1 Background. Lagoon (pond) systems are used to treat a variety of wastewaters, from domestic wastewater to complex industrial waters. Lagoon systems are primarily used in smaller communities when used for domestic wastewater treatment. The concept is well suited for remote wastewater treatment facilities at installations where land is readily available but skilled maintenance is not. Lagoon systems function under a wide range of weather conditions, from tropical to arctic. Lagoons can be used alone or in combination with other treatment processes. They are often a preferred system in hot climate zones where stringent effluent limitations do not need to be met.

This section provides general design guidance for the four major types of lagoon systems: facultative, aerobic, aerated, and anaerobic. Par. 7.2 provides an overview of the applications for the various types of lagoons. Par. 7.3 through 7.6 describe design procedures for the four lagoon types. Par. 7.7 provides design guidance for lagoon sealing procedures that apply to all of the lagoon types.

In addition to the guidance provided here, many state health departments have adopted detailed design criteria specific to their geographic regions. Thus, the designer should check state regulations to determine minimum design criteria for pond sizing. The designer should also pay particular attention to protection requirements from seepage and to groundwater monitoring requirements. Typical design criteria employed by engineers in the design of wastewater lagoons can be found in Recommended Standards for Wastewater Facilities, Great Lakes-Upper Mississippi River Board of State Public Health and Environmental Managers (Great Lakes), 1990. EPA-625/1-83-015, Design Manual for Municipal Wastewater Stabilization Ponds, describes technological advances and presents detailed planning, design, and construction information on lagoons. Included in the EPA manual are detailed sample design calculations, and the designer is encouraged to consult this reference. Design Guidance Document WEF MOP 8 also contains useful, detailed design information for facultative and aerated lagoons. This information is also covered here for completeness.

7.2 Lagoon Applications. Over the years, a variety of terms has been used to designate waste treatment lagoons,

resulting in a certain amount of confusion. Wastewater lagoon systems can be classified by dominant type of biological reaction, duration and frequency of discharge, extent of treatment ahead of the pond, or arrangement among cells (if more than one cell is used). The most basic classification describes the dominant biological reactions that occur in the lagoon, and that classification has been adopted here. The four types of lagoon systems are:

a) Facultative (aerobic-anaerobic)

b) Aerated

c) Aerobic

d) Anaerobic

Table 12 summarizes information on pond application, loading, and size for each of the pond types discussed in this section.

7.2.1 Facultative Lagoons. The most common type of pond is the facultative pond. Other terms commonly applied are oxidation pond, stabilization pond, sewage (or wastewater treatment) lagoon, and photosynthetic pond. Facultative ponds are usually 4 to 8 feet (1.2 to 2.5 m) deep, with an aerobic layer overlying an anaerobic layer, often containing solids deposits. Usual detention time is very long, ranging from 25 to 180 days. Anaerobic fermentation occurs in the lower layer and aerobic stabilization occurs in the upper layer. The key to facultative operation is oxygen production by photosynthetic algae and surface reaeration. The oxygen is used by the aerobic bacteria in stabilizing the organic material in the upper layer. Algae present in pond effluent represents one of the most serious performance problems associated with facultative ponds.

Facultative lagoons have widespread application. They are used to treat raw municipal wastewater (usually for small communities) and primary or secondary effluent (for small cities). They are also used in industrial applications, following aerated ponds or anaerobic ponds to provide additional stabilization prior to discharge. The facultative pond is the easiest to operate and maintain, but there are definite limits to its performance. Effluent BOD_5 values range from 20 to 60 mg/L, and levels of suspended solids may range from 30 to 150 mg/L or more. The facultative lagoon also requires a large land area to

maintain area BOD_5 loadings in a suitable range. For this lagoon type, allowable organic loadings are generally much higher in summer than in winter, an advantage in areas where seasonal food processing wastes are received during summer.

The total containment pond and the controlled discharge pond are forms of facultative lagoons. The total containment pond is applicable in climates where evaporative losses exceed rainfall. Controlled discharge ponds have long hydraulic detention times, and effluent is discharged once or twice per year when the effluent quality is satisfactory.

7.2.2 Aerated Lagoons. In an aerated lagoon, oxygen is supplied mainly through mechanical or diffused air aeration rather than through photosynthesis and surface reaeration. Many aerated ponds have evolved from overloaded facultative ponds that required aerator installation to increase oxygenation capacity. Aerated lagoons are generally 6 to 20 feet (2 to 6 m) deep with detention times of 7 to 20 days. The chief advantage of aerated ponds compared with facultative lagoons is that they require less land area.

Aerated ponds are used in both municipal and industrial wastewater treatment applications. For municipal wastes, aerated ponds are often resorted to when a facultative system becomes overloaded and minimal land is available for expansion. For industrial wastes, they are sometimes used as a pretreatment step before discharge to a municipal sewerage system. In both municipal and industrial applications, aerated ponds may be followed by facultative ponds.

7.2.3 Aerobic Lagoons. Aerobic ponds, also called high-rate aerobic ponds, maintain DO throughout their entire depth. With detention times averaging between 5 and 20 days, they are usually 12 to 18 inches (30 to 45 cm) deep, allowing light to penetrate the full depth. Mixing is often provided to expose all algae to sunlight and to prevent deposition and subsequent anaerobic conditions. Oxygen is provided by photosynthesis and surface reaeration, and aerobic bacteria stabilize the waste.

Table 12
Wastewater Stabilization Lagoons

Lagoon Type	Application	Typical Loading Parameters	Typical Detention Times	Typical Dimensions	Comments
Facultative	Raw municipal wastewater Effluent from primary treatment, trickling filters, aerated ponds, or anaerobic ponds	15-100 lb BOD_5/ac/d (17-110 kg BOD_5/ha/d)	25-180 d	4-8 ft (1.2-2.5 m) deep	Most commonly used waste stabilization pond type May be aerobic through entire depth if lightly loaded
Aerated	Industrial wastes Overloaded facultative ponds Situations where limited land area is available	6-20 lb BOD_5/1,000 cu ft/d (100-320 kg BOD_5/1,000 cu m/d)	7-20 d	6-20 ft (2-6 m) deep	Use may range from a supplement of photosynthesis to an extended aeration activated sludge process Requires less land area than facultative
Aerobic	Generally used to treat effluent from other processes; produces effluent low in soluble BOD_5 and high in algae solids	75-150 lb BOD_5/ac/d (85-170 kg BOD_5/ha/d)	5-20 d	1-1.5 ft (30-45 cm deep)	Application limited because of effluent quality Maximizes algae production and—if algae is harvested—nutrient removal High loadings reduce land requirements
Anaerobic	Industrial wastes	10-50 lb BOD_5/1,000 cu ft/d (160-800 kg BOD_5/1,000 cu m/d)	20-50 d	8-16 ft (2.5-5 m) deep	Odor usually a problem Subsequent treatment normally required

High-rate aerobic lagoons are limited to warm, sunny climates. They are used where a high degree of BOD_5 removal is desired but land area is limited. The chief advantage of the high-rate aerobic pond is that it produces a stable effluent with low land and energy requirements and short detention times. However, operation is somewhat more complex than for a facultative pond and, unless an algae removal step is provided, the effluent will contain high suspended solids. Short detention times also mean that very little coliform die-off will result. Because of their shallow depths, paving or covering the bottom of the ponds is required to prevent weed growth.

7.2.4 Anaerobic Lagoons. Anaerobic lagoons receive such a heavy organic loading that there is no aerobic zone. They are usually 8 to 16 feet (2.5 to 5 m) deep and have detention times of 20 to 50 days.

An important disadvantage of anaerobic ponds is the production of odorous compounds. Sodium nitrate has been used to combat odors, but it is expensive and in some cases has not proven effective. Another common approach is to recirculate water from a downstream facultative or aerobic pond to maintain a thin aerobic layer at the surface of the anaerobic pond, preventing transfer of odors to the air. Crusts have also proven effective, either naturally formed, as with grease, or formed from Styrofoam balls. A further disadvantage of the anaerobic pond is that the effluent usually requires additional treatment prior to discharge.

Anaerobic ponds are usually used for treatment of strong industrial and agricultural wastes, or as a pretreatment step where an industry is a significant contributor to a municipal system. Because they do not have wide application to the treatment of municipal wastewaters, anaerobic lagoons are not discussed further in this manual.

7.3 Facultative Lagoon Design. The facultative lagoon should be strongly considered for those installations that have no significant industrial wastewater component but that have available land area. This lagoon type is simple to operate, stable to flow and load variations, and has low capital and operating costs.

7.3.1 Sizing Basis: Loadings for Raw Sewage. Using Table 13, select values between the maximum and minimum values provided.

Choices depend on severity of freezing, ice cover, and available sunshine. Check lagoon size for detention time as listed.

For facility layout with multiple ponds in series or parallel, limit the first stage pond to 40 lb/day/acre (45 kilogram per day per hectare [kg/day/ha]) for odor control in areas where the average winter air temperature is 32°F (0°C) or less. For areas where the average winter air temperature is 50°F (10°C) or greater, the first cell in a series of cells may be loaded as high as 90 lb/day/acre (100 kg/day/ha). Proportion the remainder of the total required area based on BOD_5 loading equally among remaining cells.

Table 13
Facultative Lagoon Sizing Criteria

Climate	Minimum BOD Loading in lb/day/acre (kg/day/ha)		Detention (d)
	Minimum	Maximum	
Cold (extended ice cover)	15 (17)	20 (22)	150 - 180
Temperate (short ice cover)	20 (22)	50 (56)	40 - 150
Subtropical and tropical (no ice cover)	50 (56)	100 (112)	10 - 40

7.3.1.1 Depth. Provide an operating depth of 6 feet (1.8 m), allowing varying depth between 3 to 8 feet (0.9 to 2.4 m) for flow and load variations and insect and weed control. The ponds will slowly accumulate solids over time, so convenient access should be provided so equipment can dredge the ponds. This normally is not required more frequently than every 10 years.

7.3.1.2 Design Equations. Refer to EPA-625/1-83-015 for discussion and application of rational design equations.

7.3.2 Location. Locate the lagoon at least 0.25 mile (0.4 km) downwind from populated areas if the pond receives ice

cover through winter. Greater distance is recommended if possible.

7.3.3 Exposure. Choose a site which provides maximum sun and wind exposure.

7.3.4 Inlets and Outlets. For circular or square lagoons, the inlet should be near the center. For rectangular lagoons, place the inlet at one-third the distance from the influent end. Locate the outlet so that short-circuiting is minimized. Provide the outlet with the capability of being drawn off at multiple depths.

7.3.5 Construction. Provide levees with a minimum top width of 6 to 8 feet (1.8 to 2.4 m) and an interior and exterior slope ratio of 2:1 to 6:1. Provide natural impervious soil liner (bentonite clay) if required to minimize exfiltration to groundwater. Use of synthetic material lining will probably make this treatment process uneconomical but may be required by local regulations. See Figure 22 for details about facultative lagoons. Refer to par. 7.7 for lagoon sealing requirements.

7.3.6 Layout. Use square, rectangular, or circular basins. For small installations (5,000 gpd [19,000 Lpd]), single lagoons are acceptable. Use multiple lagoons for larger installations and arrange for series or parallel operation. See Figure 23 for alternative lagoon flow schematics. Recirculation can be used to increase operational flexibility and treatment efficiency. Recirculation returns active algae cells, increases oxygenation capacity, and dilutes influent biochemical oxygen demand (BOD) load. The recirculation ratio should be ≤2.

7.3.7 Performance. Effluent TSS will vary seasonally (especially in cold climates) between 50 and 150 mg/L or more and contain 10 to 100 mg/L of algae cells. BOD removal efficiency will vary seasonally between 70 and 95 percent. Odors may be a transient problem during spring in cold climates where lagoon surfaces freeze over.

7.4 Aerated Lagoon Design. Aerated lagoons are oxygenated through the action of surface or diffused air aeration. Because the solids are maintained in suspension in an aerated lagoon, the detention time required for BOD removal will be less than for a facultative lagoon. The power requirement, however, will be greater than for a facultative or aerobic pond, and a separate

settling pond for the aerated lagoon effluent is usually provided to remove suspended solids. The aerated lagoon is operated as a complete mix, mechanically stirred, with no recycle system. Compared with activated sludge systems, aerated lagoons have low capital and operating costs and greater ease of operation. Therefore, aerated lagoons should be strongly considered for use at installations where adequate land area is available and discharge limits are not strict.

7.4.1 Sizing Basis

7.4.1.1 Number of Equally Sized Basins. Provide at least two hydraulically separate and aerated basins and a third basin for solid-liquid separation. Aerated basins should be designed to operate either in series or in parallel flow pattern.

7.4.1.2 Design Conditions. Use the more critical of the following conditions:

a) Summer Conditions. Maximum BOD load for detention period; design removal as required for receiving water; normal summer wastewater temperatures; one basin out of service.

b) Winter Conditions. Same design load as summer; minimum wastewater temperature; removal as required for receiving water; all basins in service. Account for anticipated ice volume in total volume.

7.4.1.3 Performance and Operating Requirements.

a) Detention time. Determine required total detention time for a given number of complete mix ponds in series operation using Equation 1. It can be assumed that dissolved effluent BOD is 50 percent of total effluent BOD; that is, effluent TSS contribute 50 percent of total BOD.

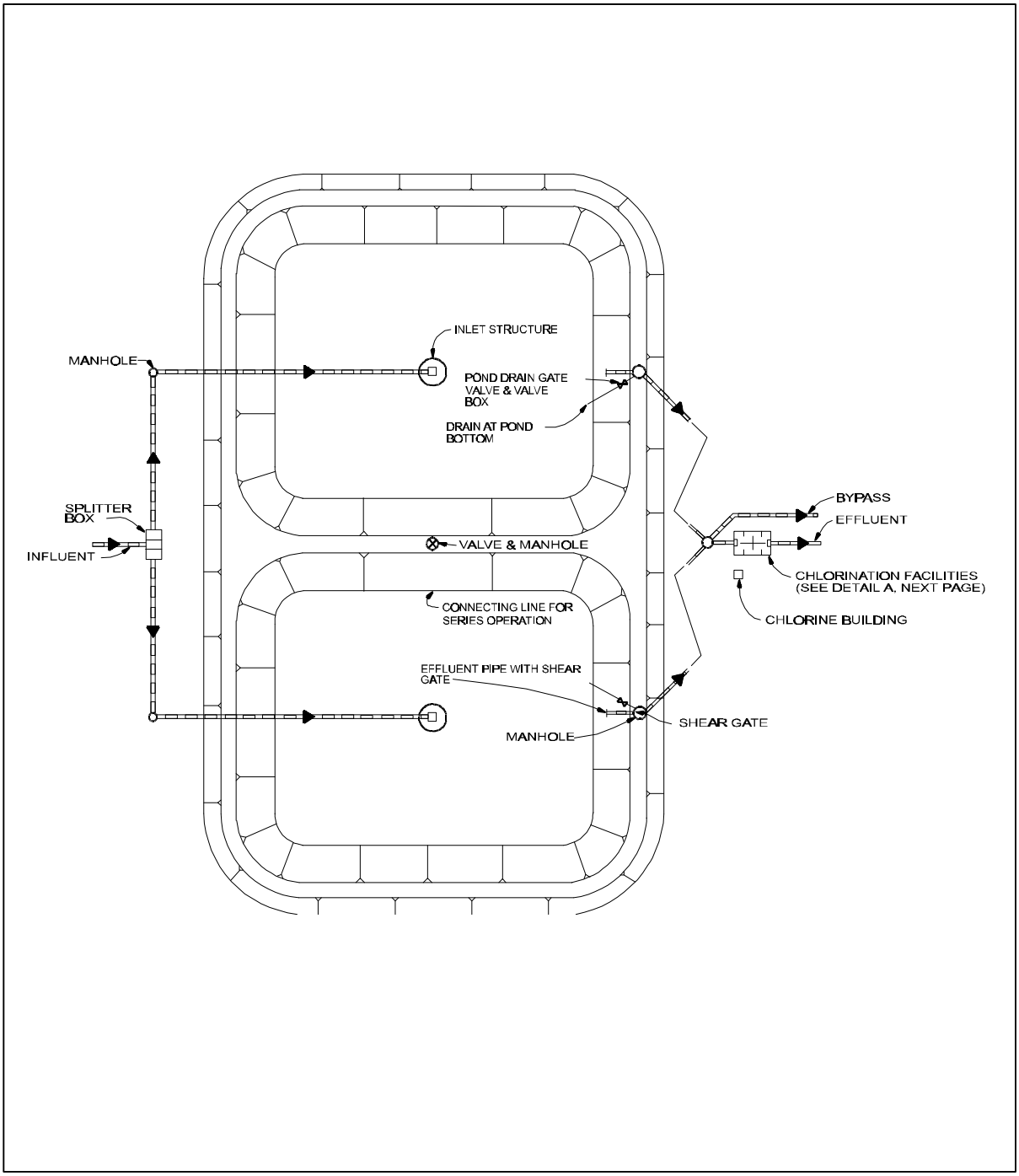

Figure 22
Facultative Lagoon and Mechanically Aerated Lagoon

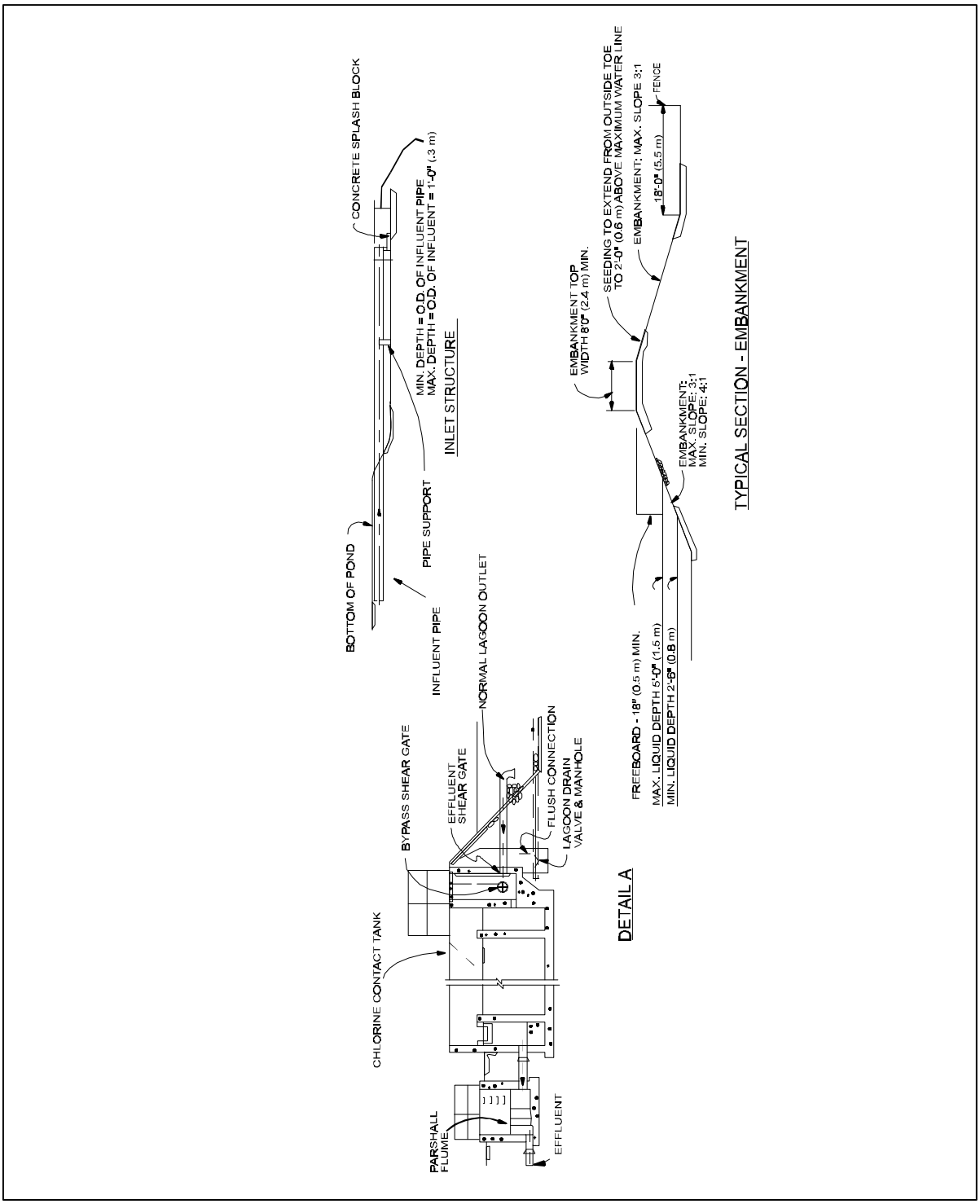

Figure 22 (Continued)

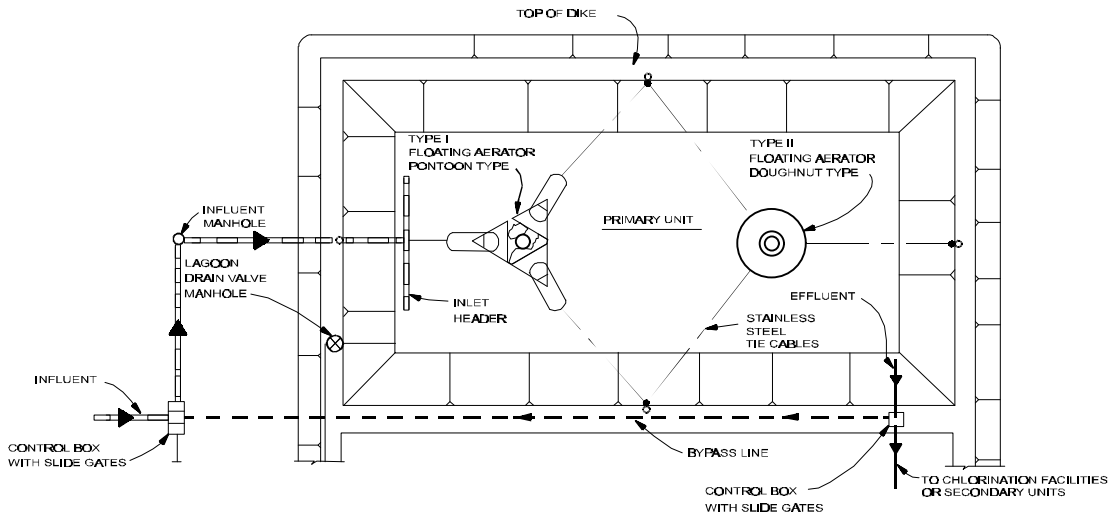

AERATED LAGOONS

(MECHANICAL AERATION)

Figure 22 (Continued)

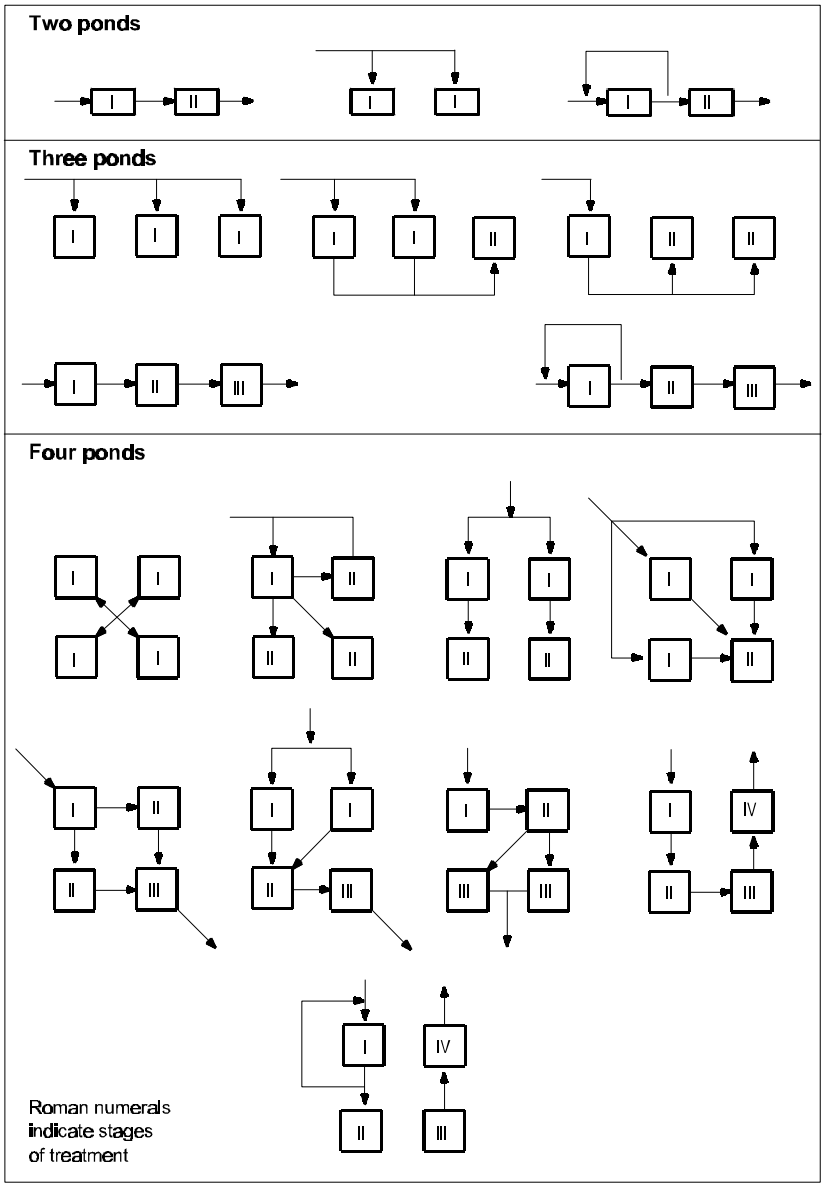

Figure 23
Alternative Lagoon Flow Schematics

EQUATION: $t = (n/K_T)[(S_o/S_e)^{1/n} - 1]$ (1)

where t = Total hydraulic detention time (d). Divide T equally among number of aerated basins.

N = Number of aerated basins operated in series.

K_T = First order reaction rate at operating lagoon temperature (d^{-1})

S_o = Influent total BOD (mg/L).

S_e = Effluent dissolved BOD (mg/L).

Determine rate constant from data for actual or similar wastes and operating conditions. If this is not practical, use K = 2.5/d for normal domestic wastewater at 20 °C (K_{20}). Adjust K_{20} to expected operating lagoon temperature using Equations (2) and (3).

Increasing the number of ponds in series (n) decreases the required total detention time (t).

b) Lagoon Temperature. Lagoon temperature is affected by the influent waste and ambient air temperature, basin geometry, and mixing conditions. The equilibrium temperature can be approximated by Equation 2.

EQUATION: $$Tw = \frac{A\ f\ Ta + Q\ Ti}{A\ f + Q} \quad (2)$$

where Tw = Lagoon waste temperature, °F (°C)

A = Surface area, sq ft (sq m)

Ta = Ambient air temperature, °F (°C)

Ti = Influent waste temperature, °F (°C)

Q = Wastewater flow rate, gpd (Lpd)

f = Proportionality factor 12 (500)

For more details, refer to "Industrial Waste Treatment in Aerated Lagoons" in Advances in Water Quality Improvement, Mancini and Barnhart, 1968, and to Process Design Techniques for Industrial Waste Treatment, Adams and Eckenfelder.

c) Temperature Correction. Use Equation 3 for temperature correction of the rate constant.

EQUATION: $K_T = K_{20} q^{(TL-20)}$ (3)

where K_T = Rate constant at TL (d^{-1})

K_{20} = Rate constant at 20°C (d^{-1})

q = 1.085 for aerobic lagoons

TL = Temperature of lagoon contents (°C)

d) Oxygen Requirements. For treatment of normal domestic sewage in aerobic lagoons, use a value of 1.3 lb O_2/lb applied (1.3 kg O_2/kg BOD). Where aerobic lagoons must meet low effluent BOD requirements, consider using a perforated pipe grid-air diffusion system. The air bubble curtain effect with this type of system minimizes short-circuiting and maximizes effectiveness of lagoon volume. Consult system supplier for performance data. Alternatively, consider multistaged lagoons and effluent recycle.

e) Mixing Requirement. No rational method is available to determine the power input necessary to keep solids suspended. Consult equipment manufacturers to determine zone of influence or complete mixing for vendor-supplied aerators. For lagoon depths of 8 to 18 feet (2.4 to 5.5 m) and suspended solids concentrations of 1,000 to 5,000 mg/L, provide 60 to 120 horsepower per million gallons (hp/mg) of basin volume. At depths greater than 12 feet (3.7 m), draft tubes may be required. For lesser depths, provide at least 30 hp/mg of basin volume. Consult the aerator manufacturer about the need for anti-erosion assemblies or special protection features to protect the pond bottom from eroding under the influence of mechanical surface aerators. Locate individual surface aerators for overlap of zone of influence. Use several small units rather than fewer large units to minimize the effect of downtime.

f) Solids Production and Buildup. Estimate production based on settleable solids removed plus biological solids yield from BOD removal. For domestic sewage, use 1.2 lb suspended solids produced per pound of BOD applied (1.2 kg suspended solids produced per kg of BOD applied). Estimate solids buildup in the final settling lagoon for storage and dredging period determination based on 50 percent destruction of volatile solids in anaerobic decomposition, and an accumulated solids concentration of 10 percent. Provide a means for periodic removal unless the solids storage volume is adequate for the useful life of the lagoon.

7.4.2 Layout. See Figure 23 for alternative layouts with multiple lagoons in series and parallel operation.

7.4.3 Construction. To prevent leakage, construct aerated lagoons with earth embankments and impervious synthetic liners or natural soil layers. See Figure 22 for details about aerated lagoons. Refer to par. 7.7 for a discussion of liner and sealing requirements.

7.4.4 Dimensions. The following dimensions are minimum values:

a) Length-to-width ratio: From 1:1 to 4:1

b) Depth: From 10 to 20 feet (3 to 6 m) (with mixing provision)

c) Freeboard: 3 feet (0.9 m)

7.4.5 Inlets and Outlets. Locate the inlet at maximum distance from the outlet; discharge near aeration devices so diffusion will be rapid. Provide for submerged drawoff to avoid floating material in effluent.

7.4.6 Protection. Provide scour pads beneath mechanical aerators to avoid any possibility of membrane liners being pulled into aerator rotors. Provide splash blocks at inlet discharges. Riprap banks at water surface.

7.5 Aerobic Lagoon Design. The aerobic lagoon is most applicable to domestic waste treatment in subtropical and tropical climates. It should be considered for installations with suitable land area and climate because it is simple to operate and has low capital and operating costs. Aerobic lagoons

for continuous year-round use should be restricted to areas where the visible solar radiation is greater than 1.0 million calories per square meter per day (cal/sq m/d) 90 percent of the time and where freezing conditions never persist for an extended time.

7.5.1 Sizing Basis

7.5.1.1 Loading. BOD removal for settled sewage (primary effluent) by an aerobic lagoon can be determined using Equation 4. The equation appears first in English, then in international system (SI) units.

EQUATION:

$$\Delta BOD = \frac{21.872}{d} [\ln (I_o/24)] \quad (4)$$

$$\Delta BOD = \frac{6.66}{d} [\ln (I_o/258)]$$

where ΔBOD = BOD removed by lagoon (mg/L)

d = lagoon mid-depth (≤1.5 feet [≤0.5 m])

I_o = light intensity at lagoon surface (footcandles [lux])

Term I_o is determined by the method of Oswald and Gotaas, Photosynthesis in Sewage Treatment, ASCE, 1957. In the absence of necessary solar radiation data, determine the total required lagoon volume based on a BOD surface loading rate of 60 (subtropical) to 120 (tropical) lb/day/acre (67 [subtropical] to 134 [tropical] kg/day/ha). Proportion total required volume equally among multiple lagoons in series or parallel operation.

7.5.1.2 Depth. Operating depth should be 1 to 2 feet (0.3 to 0.6 m) and should not exceed 3 feet (0.91 m) to ensure light penetration and photosynthetic activity for the full depth of the lagoon.

7.5.1.3 Applications. Refer to EPA-625/1-83-015 for further discussion of aerobic and nondischarging lagoons and application of design equations.

a) Location. Refer to par. 7.3.2.

b) Exposure. Refer to par. 7.3.3.

c) Inlet and Outlet. Refer to par. 7.3.4 for rectangular ponds.

d) Construction. Refer to pars. 7.3.5 and 7.4.3.

e) Layout. Use multiple rectangular lagoons in series or parallel operation with length-to-width ratios of 2:1 to 3:1. The individual lagoon area should be less than 10 acres (4 ha) to minimize short-circuiting caused by wind action. Recirculation may be used to increase oxygenation capacity and seed influent sewage with algae cells. Recirculation ratios are 0.2 to 2.0 and average 0.5. See Figure 23 for alternative lagoon flow schematics.

f) Performance. Performance criteria for aerobic lagoons are similar to those for facultative lagoons except algae concentrations are higher (100 to 200 mg/L for aerobic lagoons). Aerobic lagoons should be preceded by primary treatment for removal of settleable organic solids. If the system is not preceded by primary treatment, influent nondegradable solids will gradually fill the lagoon.

7.6 Anaerobic Lagoon Design. Anaerobic lagoons are deep lagoons that receive high-strength biodegradable organic wastes such that anaerobic conditions prevail throughout the lagoon depth. This lagoon type is used primarily to pretreat industrial wastes and is generally not applicable to wastewaters generated at military facilities. For design guidance, see EPA-625/1-83-015.

7.7 Lagoon Sealing. Lagoons are sealed to minimize seepage and the resulting adverse effect on groundwater quality and treatment performance. Pond sealers are classified into three categories: synthetic and rubber liners, earthen and cement liners, and natural and chemical treatment sealers. Natural sealing occurs because soil pores become physically clogged by settled solids, pores become chemically clogged by ion exchange and precipitation, and pores become biologically clogged by microbial growth. Natural sealing depends on wastewater characteristics and should not be relied on for satisfying design seepage criteria. Chemical treatment sealers change the nature of the bottom soil.

Contact the state regulatory agency for design seepage rate and groundwater monitoring requirements at the lagoon site.

Also consult EPA's Municipal Wastewater Lagoon Study: Report to Congress for discussion and design guidance on minimizing seepage to groundwater. Typical design seepage rate is 10^{-6} cm/second (0.021 gpd/sq ft [0.86 Lpd/sq m]) for domestic wastewater lagoons. Industrial waste impoundments may require lower seepage rates or a double liner for redundancy.

7.7.1 Bentonite Admixtures. Bentonite is a sodium-type montmorillonite clay that exhibits a degree of swelling, imperviousness, and low stability in the presence of water. It can be applied as a water slurry and incorporated with in-situ soils or as a sand-bentonite slurry (8:1 volume ratio) that is subsequently covered with soil.

a) Organic polyelectrolytes can be mixed with bentonite and soil to decrease the permeability of the admixture. Contact bentonite suppliers for further information and test procedures.

b) The performance of bentonite linings is greatly affected by the quality of the bentonite. Bentonite characteristics that should be specified in preparation of admixtures include sodium exchange capacity (SAR); percent of silt, sand, and clay impurities; moisture content; particle size; and gradation.

c) Determine the required amount of bentonite in the bentonite-soil by using mixture based on field soil sampling and laboratory tests by sealant suppliers. Use Figure 24 for guidance only and for reviewing laboratory results.

7.7.2 Asphalt and Cement Linings. Asphalt linings may be composed of asphalt or a prefabricated asphalt with or without admixtures (bentonite or fiberglass). Soil cement sealant is best when used with sandy, well-graded soil. Avoid using bentonite and asphalt liners in areas with high weed growth.

7.7.3 Thin Membrane Liners. These liners include plastic and elastomeric membranes and are best used for sites requiring essentially zero permeability. For further information, see FED MCD-54, Wastewater Stabilization Pond Linings. Refer to EPA SW-870, Lining of Waste Impoundment and Disposal Facilities, for a listing of membrane suppliers and details of construction.

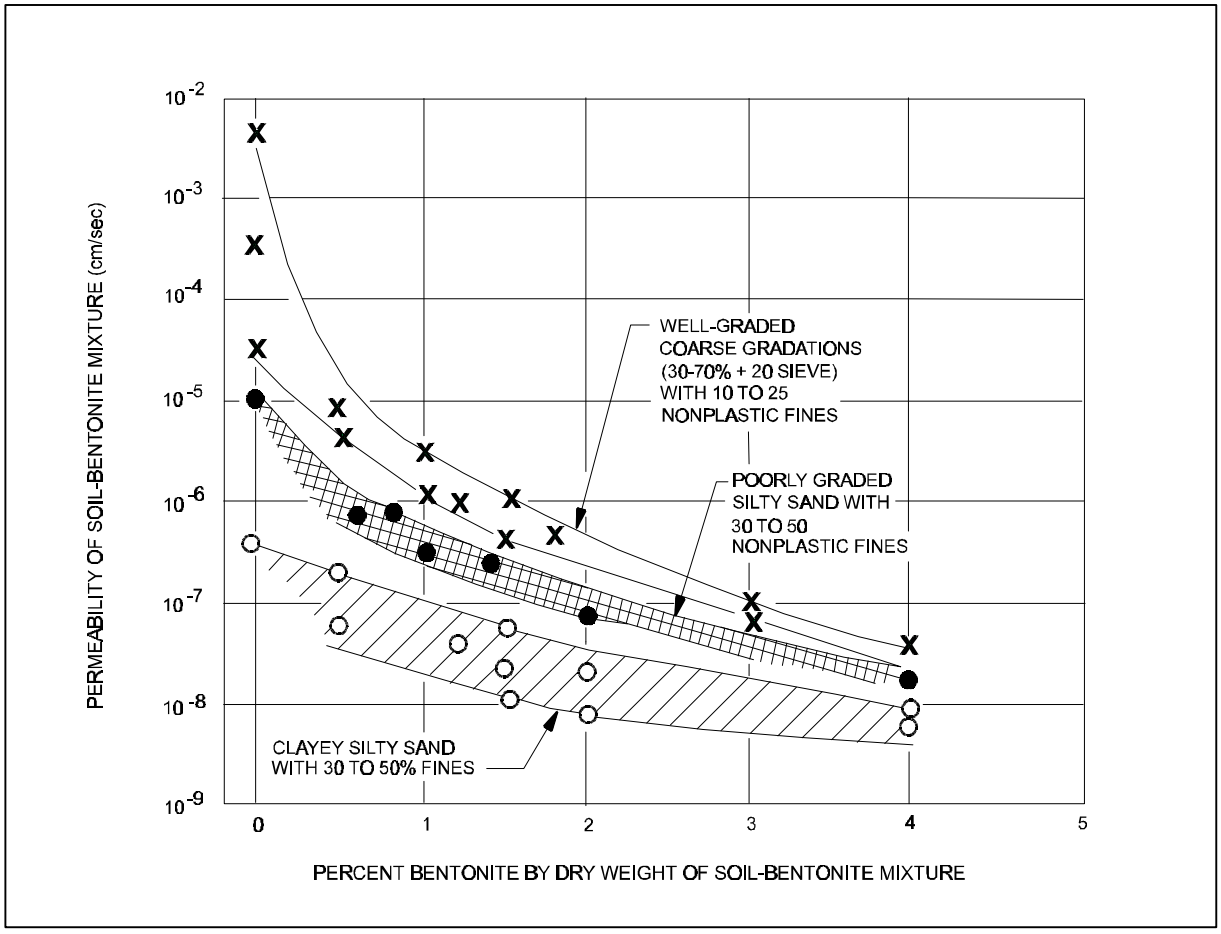

Figure 24
Relationship Between Permeability and Quantity
of Bentonite in Soil Mixing

Section 8: CHEMICAL STORAGE AND HANDLING CONSIDERATIONS

8.1 Information and Resources. Process chemicals used in wastewater treatment vary greatly in their specific requirements for safe storage and handling. WEF MOP 8 provides guidance on designing dry and liquid feed systems for wastewater treatment applications. WEF MOP FD-10 provides guidance for the safe storage, handling, and feeding of chlorine disinfection chemicals including gaseous chlorine and hypochlorite. Several industrial associations, including the Chlorine Institute, the National Lime Association, the Chemical Manufacturing Association (CMA), and the National Fire Protection Association (NFPA) provide information for designers. In addition, chemical manufacturers will supply handbooks and material safety data sheets (MSDSs) for specific process chemicals upon request. Table 14 provides basic reference information about various chemicals, including their common names, formulas, and most common uses. It also covers the forms and containers in which they are obtained and general characteristics of the chemicals. Table 15 presents information about feeding these chemicals, including the best form for feeding, the amount of water needed for continuous dissolving, types of feeders, and equipment and handling materials. However, new information about existing materials is continually emerging and new materials are continually becoming available. When possible, the treatment plant designer should seek manufacturers' recommendations for up-to-date materials and handling practices. Any hazardous chemicals used on a project should be reported to the installation's environmental office.

8.2 Designer's Checklists. Designers should consider a number of handling, storage, equipment, and safety issues when designing wastewater treatment systems for military facilities. The following paragraphs list these considerations.

8.2.1 Chemical Handling Checklist. A well designed handling area should include the following elements:

a) Easily accessible, clearly marked, well lighted unloading stations

b) Guard posts to protect equipment and storage tanks from vehicle damage

c) A roofed platform or dock for unloading containerized chemicals

d) Mechanical devices to aid unloading and transporting chemicals to storage areas

e) Separate receiving and storage areas for chemicals that react violently when mixed together

f) Unique pipe configuration and valving for each chemical storage tank on site to prevent the wrong chemical from being loaded into a tank

g) Dust control equipment for dry bulk and bagged chemicals

h) Protection of concrete against corrosive chemicals

i) Washdown and cleanup facilities for all chemical handling areas and separate drainage systems for noncompatible chemicals

j) A bulk tank level control system with a high-level alarm audible at the truck unloading station

8.2.2 Chemical Storage Checklist. Proper storage of chemicals is an important element in treatment facility design. Designers should take the following steps to ensure that adequate storage facilities exist at each treatment facility.

8.2.2.1 Storage for All Chemicals

a) Provide adequate storage for peak demands.

b) Label chemical storage areas.

c) Determine compatibility of all chemicals stored.

d) Store incompatible chemicals separately.

e) Follow the chemical manufacturer’s recommendations with regard to material compatibility and selection of system components in direct chemical contact.

f) Comply with all applicable codes and regulations.

g) Locate light and ventilation switches outside storage areas.

h) Provide automatic controls to actuate forced ventilation and lighting when chemical storage rooms are occupied.

i) Protect concrete and other exposed materials against corrosive chemicals.

8.2.2.2 Storage for Dry or Containerized Chemicals

a) Store materials in original containers in dry rooms on boards or pallets.

b) Provide adequate room to maneuver hand trucks, pallet jacks, or fork lifts.

c) Locate the storage of dry chemicals at feed hopper inlet level, if possible. Alternately, provide a platform suitable for supporting a pallet of containers at the feed hopper inlet level.

d) Post safe-load limits for floors and shelving.

8.2.2.3 Storage for Liquid Chemicals

a) Provide for containment of stored volume plus a safety margin.

b) Provide for cleanup or reuse of spilled material.

c) Ensure that bulk containers have sufficient capacity to hold the contents of one standard tank truck plus a sufficient reserve supply between shipments.

d) Provide approved storage facilities for flammable liquids.

e) Provide freeze protection for exposed piping, valves, and bulk tanks.

8.2.2.4 Storage for Liquified Gas Cylinders

a) Provide for containment of leaking containers.

b) Provide treatment systems for hazardous gas release.

c) Provide cool, dry, well ventilated storage rooms of noncombustible construction.

d) Avoid proximity to heat sources; walkways; elevators; stairways; and heating, ventilating, and air-conditioning (HVAC) intakes.

e) Provide restraints on gas cylinders.

8.2.3 Feed Equipment Checklist. Equipment considerations for designers include the following:

a) Follow the chemical manufacturer's recommendations with regard to material compatibility and selection of system components in direct chemical contact.

b) Equip pumps and equipment that handle corrosive solutions with spray or splash guards to protect personnel working in the area.

8.2.4 Safety Checklist. Take precautions to ensure adequate safety by providing the following features in treatment facility design:

a) Continuous toxic gas monitors with alarms

b) Explosive gas monitors and alarms, ventilation equipment, and other safety devices for flammables such as special grounding measures, flame and spark arresters, etc. to ensure a non-explosive environment is maintained and potential ignition sources are eliminated

c) Pressure demand self-contained breathing apparatus (SCBA) for emergency gas release situations

d) Emergency deluge shower and eyewash facilities located where easily accessible to those in need

e) Adequate ventilation

f) Personal protective apparel such as gloves, goggles, face shields, aprons, and dust masks

g) Non-slip flooring in polymer storage and handling areas

h) Facility designs that eliminate the need to reach beyond safe limits

i) Facility designs that minimize the need for manual lifting

j) Directive, hazard-warning, and instructional signs where appropriate

8.3 Codes and Regulations. Governments at all levels establish codes and regulations that provide the designer with minimum requirements and guidance. The Occupational Safety and Health Act of 1970 and its subsequent amendments is probably the most significant Federal statute affecting design of chemical handling and storage facilities. However, there are other applicable regulations, and keeping up with them is a challenge. Today, computerized services that summarize building codes by categories (for example, life safety and fire prevention) are available. However, the treatment plant designer must determine which codes apply to wastewater treatment plants. For installations in foreign countries, consult the Final Governing Standards (FGS) for the country in which the facility will be located.

Table 14
Chemical Shipping Data and Characteristics

Chemical	Shipping Data		Characteristics			
Common Name/ Formula Use	Grades or Available Forms	Containers and Requirements	Appearance and Properties	Weight lb/cu ft (Bulk Density)	Commercial Strength	Solubility in Water gm/100 mL[1]
ALUM: $A1_2(SO_4)_3 \cdot XH_2O$ Liquid 1 gal 36°Be = 5.38 lb of dry alum: 60°F Coag. at pH 5.5 to 8.0 Sludge conditioner Precipitate PO_4	Soln. 32.2°Be to 37°Be	Manufactured near site 6,000: 8,000 gal steel T/C 2,000 to 4,000 gal rubber-lined steel tank trucks High freight cost precludes distant shipment	Light green to light brown soln. F.P. or crystallization point for: 35.97°Be = 4°F 36.95°Be = 27°F 37.7°Be = 60°F 1% soln.: pH 3.4 Visc. 36°Be at 60°F = 25 cp	36°Be sp.g. = 1.33 or 11.1 lb/gal at 60°F	At 60°F 32.2°Be: 7.25% Al_2O_3 35.97°Be: 8.25% Al_2O_3 37°Be: 8.5% Al_2O_3	Completely miscible
ALUMINUM SULFATE: $A1_2(SO_4)3 \cdot 14H_2O$ (Alum, filter alum) Coagulation at pH 5.5 to 8.0 Dosage between 0.5 to 9 gpg Precipitate PO_4	Lump Granular Rice Ground Powder	Bags: 100 & 200 lb Bbl.: 325 & 400 lb Drums: 25, 100, & 250 lb Bulk: C/L	Light tan to gray-green Dusty, astringent Only slightly hygroscopic 1% soln.: pH 3.4	60 to 75 (powder is lighter) To calculate hopper capacities, use 60	98% plus or 17% Al_2O_3 (minimum)	72.5 at 0°C 78.0 at 10°C 87.3 at 20°C 101.6 at 30°C
AMMONIA ANHYDROUS: NH_3 (Ammonia) Chlorine-ammonia treatment Anaerobic digestion Nutrient	Colorless liquified gas	Steel cylinders: 50, 100, 150 lb T/C: 50,000 lb Green gas label	Pungent, irritating odor Liquid causes burns F.P. is -107.9°F B.P. is -28°F sp.g. (gas) 0.59 at 70°C and 1 atm MCA warning label Visc. liquid = 0.27 cps at 33°C	sp.g. of liquid is 0.68 at -28°F	99 to 100% NH_3	89.9 at 0°C 68.0 at 10°C 57.5 at 20°C 47.7 at 30°C

Table 14 (Continued)
Chemical Shipping Data and Characteristics

Chemical	Shipping Data		Characteristics			
Common Name/ Formula Use	Grades or Available Forms	Containers and Requirements	Appearance and Properties	Weight lb/cu ft (Bulk Density)	Commercial Strength	Solubility in Water gm/100 mL[1]
AMMONIA, AQUA: NH_4OH (Ammonium hydroxide, ammonia water, ammonium hydrate) Chlorine-ammonia treatment pH control Nutrient	Technical Certified pure Solution 16°Be 20°Be 26°Be	Carboys: 5 & 10 gal Drums: 375 & 750 lb T/C: 8,000 gal	Water white soln. Strongly alkaline Causes burns Irritating vapor Unstable; store in cool place and tight container MCA warning label Vent feeding systems	At 60°F 26°Be Sp.g. 0.8974	16°Be 10.28% NH_3 20°Be 17.76% NH_3 26°Be 29.4% NH_3	Completely miscible
CALCIUM HYDROXIDE: $Ca(OH)_2$ (Hydrated lime, slaked lime) Coagulation, softening pH adjustment Waste neutralization Sludge conditioning Precipitate PO_4	Light powder Powder	Bags: 50 lb Bbl: 100 lb Bulk: C/L (store in dry place)	White 200 to 400 mesh powder Free from lumps Caustic, irritant, dusty Sat. soln.: pH 12.4 Absorbs H_2O and CO_2 from air to revert back to $CaCO_3$ 10% slurry: 5 to 10 cps Sp.g. = 1.08	20 to 30 and 30 to 50 To calculate hopper capacity, use 25 or 35	$Ca(OH)_2$ 82 to 95% CaO 62 or 72%	0.18 at 0°C 0.16 at 20°C 0.15 at 30°C

Table 14 (Continued)
Chemical Shipping Data and Characteristics

Chemical	Shipping Data		Characteristics			
Common Name/ Formula Use	Grades or Available Forms	Containers and Requirements	Appearance and Properties	Weight lb/cu ft (Bulk Density)	Commercial Strength	Solubility in Water gm/100 mL[1]
CALCIUM HYPOCHLORITE: $Ca(OCl)_2 \cdot 4H_2O$ (H.T.H., Perchloron, Pittchlor) Disinfection Slime control Deodorization	Granules Powder Pellets	Bbl: 415 lb Cans: 5, 15, 100, 300 lb Drums: 800 lb (store dry and cool and avoid contact with organic matter)	White or yellowish white Hygroscopic corrosive Strong chlorine odor (Alkaline pH) Yellow label—oxidizing agent	Granules 68 to 80 Powder 32 to 50	70% avail. Cl_2	21.88 at 0°C 22.7 at 20°C 23.4 at 40°C
CALCIUM OXIDE: CaO (Quicklime, burnt lime, chemical lime, unslaked lime) Coagulation Softening pH adjustment Waste neutralization Sludge conditioning Precipitate PO_4	Pebble Lump Ground Pulverized Pellet Granules Crushed	Moisture-proof bags: 100 lb Wood barrel Bulk: C/L (store dry: max. 60 days and keep container closed)	White (light gray, tan) lumps to powder Unstable, caustic, irritant Slakes to hydroxide slurry evolving heat Air slakes to form $CaCO_3 \cdot$sat. Soln. pH is 12.4	55 to 70 To calculate hopper capacity, use 60 Pulv. is 43 to 65	70 to 96% CaO (below 85% can be poor quality)	Reacts to form $CA(OH)_2$ See $CA(OH)_2$ above[2]
CARBON, ACTIVATED: C (Nuchar, Norit, Darco, Carbodur) Decolorizing, taste and odor removal Dosage between 5 and 80 ppm	Powder Granules	Bags: 35 lb (3 x 21 x 39 in) Drums: 5 lb & 25 lb Bulk: C/L	Black powder, about 400 mesh Dusty, smoulders if ignited Arches in hoppers; floodable[3] Do not mix with $KMnO_4$, hypo-chlorite, or CaO; pH varies	Powder 8 to 28 (avg. 12)	10% C (bone charcoal) to 90% C (wood charcoal)	Insoluble forms a slurry

Table 14 (Continued)
Chemical Shipping Data and Characteristics

Chemical	Shipping Data		Characteristics			
Common Name/ Formula Use	Grades or Available Forms	Containers and Requirements	Appearance and Properties	Weight lb/cu ft (Bulk Density)	Commercial Strength	Solubility in Water gm/100 mL[1]
CHLORINE: Cl_2 (Chlorine gas, liquid chlorine) Disinfection Slime control Taste and odor control Waste treatment Activation of silica[4]	Liquefied gas under pressure	Steel cylinders: 100 & 150 lb Ton containers T/C: 15-ton containers T/C: 16, 30, 55 tons Green label	Greenish-yellow gas liquefied under pressure Pungent,noxious, corrosive gas heavier than air Health hazard	sp.g. with respect to air = 2.49	99.8% Cl_2	0.98 at 10°C 0.716 at 20°C 0.57 at 30°C
CHLORINE DIOXIDE: ClO_2 Disinfection Taste and odor control (especially phenol) Waste treatment 0.5 to 5 lb $NaClO_2$ per million gal H_2O dosage	Generated as used from Cl_2 and $NaClO_2$ or from NaOCl plus acid Dissolved as generated	26.3% avail. Cl_2	Yellow solution when generated in water Yellow-red gas Unstable, irritating, poisonous, explosive Keep cool, keep from light	-----	Use 2 lb of $NaCl0_2$ to 1 lb of Cl_2, or equal conc. of $NaClO_2$ and NaOCl plus acid (max. 2% each plus diln. water)	0.29 at 21°C
FERRIC CHLORIDE: $FeCl_3$ - anhydrous $FeCl_3$ - $6H_2O$ = crystal $FeCl_3$ - solution (Ferrichlor, chloride or iron) Coagulation pH 4 to 11 Dosage: 0.3 to 3 gpg (sludge cond. 1.5 to 4.5% $FeCl_3$) Precipitate PO_4	Solution Lumps-sticks (crystals) Granules	Solution Carboys: 5, 13 gal Truck, T/C Crystal Keg: 100, 400, 450 lb Drums: 150, 350, 630 lb	Solution Dark brown syrup Crystals Yellow-brown lumps Anhydrous Green, black Very hygro-scopic, staining, corrosive in liquid form 1% soln.: pH 2.0	Solution 11.2 to 12.4 lb Crystal 60 to 64 Anhydrous 45 to 60	Solution 35 to 45% $FeCl_3$ Crystal 60% $FeCl_3$ Anhydrous 96 to 97% $FeCl_3$	Solution Completely miscible Crystals 91.1 at 20°C Anhydrous 74.4 at 0°C

Table 14 (Continued)
Chemical Shipping Data and Characteristics

Chemical	Shipping Data		Characteristics			
Common Name/ Formula Use	Grades or Available Forms	Containers and Requirements	Appearance and Properties	Weight lb/cu ft (Bulk Density)	Commercial Strength	Solubility in Water gm/100 mL[1]
FERRIC SULFATE: $Fe_2(SO_4)_3 \cdot 3H_2O$ (Ferrifloc) $Fe_2(SO_4)_3 \cdot 2H_2O$ (Ferriclear) (Iron sulfate) Coag. pH 4-6 & 8.8-9.2 Dosage: 0.3 to 3 gpg Precipitate PO_4	Granules	Bags: 100 lb Drums: 400 & 425 lb Bulk: C/L	$2H_2O$, red brown $3H_2O$, red gray Cakes at high RH Corrosive in soln. Store dry in tight containers Stains	70 to 72	$3H_2O$ 68% $Fe_2(SO_4)_3$ 18.5% Fe $2H_2O$ 76% $Fe_2(SO_4)_3$ 21% Fe	Very soluble
FERROUS SULFATE: $FeSO_4 \cdot 7H_2O$ (Copperas, iron sulfate, sugar sulfate, green vitroil) Coagulation at pH 8.8 to 9.2 Chrome reduction in waste treatment Sewage odor control Precipitate PO_4	Granules Crystals Powder Lumps	Bags: 100 lb Bbl: 400 lb Bulk	Fine greenish crystals M.P. is 64°C Oxidizes in moist air Efflorescent in dry air Masses in storage at higher temp. Soln. is acid	63 to 66	55% $FeSO_4$ 20% Fe	32.8 at 0°C 37.5 at 10°C 48.5 at 20°C 60.2 at 30°C
HYDROGEN PEROXIDE: H_2O_2 Odor control	Soln. 35% & 50%	4,000 and 8,000 gal T/C and 4,000 T/T	Clear, colorless liquid at all concentrations F.P. for 50% = -40°C	For 35%, sp.g. = 1.13 or 9.4 lb/gal For 50%, sp.g. = 1.20 or 10.0 lb/gal	For 35%, 396 g/L H_2O_2 or 16.5% O_2 For 50%, 598 g/L H_2O_2 or 23.5% O_2	Completely miscible
METHANOL: CH3•OH Wood alcohol denitrification	Liquid	Drums, bulk	Clear, colorless liquid at all concentrations	For 100%, sp.g. @ 20°C = 0.7917	99%	Completely miscible

Table 14 (Continued)
Chemical Shipping Data and Characteristics

Chemical	Shipping Data		Characteristics			
Common Name/ Formula Use	Grades or Available Forms	Containers and Requirements	Appearance and Properties	Weight lb/cu ft (Bulk Density)	Commercial Strength	Solubility in Water gm/100 mL[1]
OZONE: O_3 Taste and odor control Disinfection Waste treatment Odor: 1 to 5 ppm Disinfection: 0.5 to 1 ppm	Gas Liquid	Generated at site by action of electric discharge through dry air: 0.5 to 1% produced	Colorless-bluish gas or blue liquid Toxic: do not breathe Explosive Fire hazard Keep from oil or readily combustible materials	Density of gas is 2.1 gm/L Liquid sp.g. is 1.71 at -183°C.	1 to 2%	49.4 cc at 0°C
PHOSPHORIC ACID, ORTHO: H_3PO_4 Boiler water softening Alkalinity reduction Cleaning boilers Nutrient feeding	50, 75, 85, 90% Anhydrous Commer-cial Technical Food N.F.	Bottles: 1 to 5 lb; 5, 6-1/2, 13 gal Carboys: 55-gal drums & barrels Tank cars and trucks	Clear, colorless liquid F.P. (50%) is 35°C B.P. (50%) is 108°C pH (0.1N) is 1.5 15 to 30 cp viscosity according to % Avoid skin contact MCA warning label Can form H_2 with some metals	50% 11.2 lb/gal 75% 13.3 lb/gal 85% 14.1 lb/gal	50, 75, and 85% conc.	Liquid miscible with water in all proportions
POLYMERS, DRY[5] High M.W. synthetic polymers	Powdered, flakey granules	Multiwall paper bags	White flake powder pH varies	27 to 35	----	Colloidal solution

Table 14 (Continued)
Chemical Shipping Data and Characteristics

Chemical	Shipping Data		Characteristics			
Common Name/ Formula Use	Grades or Available Forms	Containers and Requirements	Appearance and Properties	Weight lb/cu ft (Bulk Density)	Commercial Strength	Solubility in Water gm/100 mL[1]
POLYMERS, LIQUID AND EMULSIONS[5] High M.W. synthetic polymers Separan NP10 potable grade, Magnifloc 990; Purifloc N17 Ave. Dosage: 0.1 to 1 ppm	----	Drums, bulk	Viscose liquid	Liquid: 20 to 5,000 cp at 70°F Emulsions: 200 to 700 cp at 70°F	----	Colloidal solution
POTASSIUM PERMANGANATE: KMnO4 Cairox Taste odor control 0.5 to 4.0 ppm Removes Fe and Mn at a 1-to-1 ratio	Crystal	U.S.P. 25-,110-,125-lb steel keg Technical 25-,110-,600-lb steel drum	Purple crystals sp.g.: 2.7 Decomposes 240°C Can cake up at high relative humidity Strong oxidant Toxic Keep from organics Yellow label	86 to 102	Tech. is 97% minimum Reagent is 99% minimum	2.8 at 0°C 3.3 at 10°C 5.0 at 20°C 7.5 at 30°C
SODIUM ALUMINATE: $Na_2Al_2O_4$, anhy. (soda alum) Ratio Na_2O/Al_2O_3 1/1 or 1.15/1 (high purity) Also $Na_2A1_2O_4 \cdot 3H_2O$ hydrated form Coagulation Boiler H_2O treatment	Ground (pulv.) Crystals Liquid, 27°Be Hydrated Anhydrous	Ground bags: 50-, 100-lb drums Liquid drums	High purity white Standard gray Hygroscopic Aq. soln. is alkaline Exothermic heat of solution	High purity 50 Std. 60	High Purity Al_2O_3 45% $Na_2Al_2O_4$ 72% Standard Al_2O_3 55% $Na_2Al_2O_4$ 88 to 90%	Hydrated 80 at 75°F Std. 6 to 8% insolubles Anhy. 3/gal at 60°F

Table 14 (Continued)
Chemical Shipping Data and Characteristics

Chemical	Shipping Data		Characteristics			
Common Name/ Formula Use	Grades or Available Forms	Containers and Requirements	Appearance and Properties	Weight lb/cu ft (Bulk Density)	Commercial Strength	Solubility in Water gm/100 mL[1]
SODIUM BICARBONATE: $NaHCO_3$ (baking soda) Activation of silica pH adjustment	U.S.P. C.P. Commercial Pure Powder Granules	Bags: 100 lb Bbl: 112, 400 lb Drums: 25 lb Kegs	White powder Slightly alkaline 1% soln.: pH 8.2 Unstable in soln. (decomposes into CO_2 and Na_2CO_3) Decomposes 100°F	59 to 62	99% $NaHCO_3$	6.9 at 0°C 8.2 at 10°C 9.6 at 20°C 10.0 at 30°C
SODIUM BISULFITE, ANHYDROUS: $Na_2S_2O_5$ ($NaHSO_3$) (Sodium pyrosulfite, sodium meta-bisulfite) Dechlorination: about 1.4 ppm for each ppm $C1_2$ Reducing agent in waste treatment (as Cr)	Crystals Crystals plus powder Solution (3.25 to 44.9%)	Bags: 100 lb Drums: 100 & 400 lb	White to slight yellow Sulfurous odor Slightly hygroscopic Store dry in tight container Forms $NaHSO_3$ in soln. 1% soln.: pH 4.6 Vent soln. tanks	74 to 85 and 55 to 70	97.5 to 99% $Na_2S_2O_5$ SO_2 65.8%	54 at 20°C 81 at 100°C
SODIUM CARBONATE: Na_2CO_3 (Soda ash: 58% Na_2O) Water softening pH adjustment	Dense granules Med. gran. and pwd. Light powder	Bags: 100 lb Bbl: 100 lb Drums: 25 & 100 lb Bulk: C/L	White, alkaline Hygroscopic: can cake up 1% soln.: pH 11.2	Dense 65 Medium 40 Light 30	99.2% Na_2CO_3 58% Na_2O	7.0 at 0°C 12.5 at 10°C 21.5 at 20°C 38.8 at 30°C

Table 14 (Continued)
Chemical Shipping Data and Characteristics

Chemical	Shipping Data		Characteristics			
Common Name/ Formula Use	Grades or Available Forms	Containers and Requirements	Appearance and Properties	Weight lb/cu ft (Bulk Density)	Commercial Strength	Solubility in Water gm/100 mL[1]
SODIUM CHLORITE: $NaClO_2$ (Technical sodium chlorite) Disinfection, taste, and odor control Ind. waste treatment (with Cl_2 produces ClO_2)	Powder Flakes Crystals (tech. and analyt-ical) Soln. (about 40%) crystal-lizes about 95°F	Drums: 100 lb (do not let $NaClO_2$ dry out on combustible materials)	Tan or white crystals or powder Hygroscopic Poisonous Powerful oxidizing agent Explosive on contact with organic matter Store in metal containers only Oxidizer Liquid: white label Solid: yellow label	65 to 75	Technical 81% 78% (minimum) 124% avail. Cl_2 Anal. 98.5% 153% avail. Cl_2	34 at 5°C 39 at 17°C 46 at 30°C 55 at 60°C
SODIUM HYDROXIDE: NaOH (Caustic soda, soda lye) pH adjustment, neutralization	Flakes Lumps Powder Solution	Drums: 25, 50, 350, 400, 700 lb Bulk: Solution in T/C Liquid White label	White flakes, granules, or pellets Deliquescent, caustic poison Dangerous to handle 1% soln.: pH 12.9 50% soln. will crystallize at 54°F	Pellets 60 to 70 Flakes 46 to 62	Solid 98.9% NaOH 74.76% Na_2O Solution 12 to 50% NaOH	42 to 0°C 51.5 at 10°C 109 at 20°C 119 at 30°C

Table 14 (Continued)

Chemical Shipping Data and Characteristics

Chemical	Shipping Data		Characteristics			
Common Name/ Formula Use	Grades or Available Forms	Containers and Requirements	Appearance and Properties	Weight lb/cu ft (Bulk Density)	Commercial Strength	Solubility in Water gm/100 mL[1]
SODIUM HYPOCHLORITE: NaOCl (Javelle water, bleach liquor, chlorine bleach) Disinfection, slime control Bleaching	Solution White or yellow label	Carboys: 5 & 13 gal Drums: 30 gal Bulk: 1,300, 1,800, 2,000 gal %/T	Yellow liquid Strongly alkaline Store in cool place Protect from light and vent containers at intervals Can be stored about 60 days under proper conditions	15% 10.2 lb/gal 12.5% 10 lb/gal	15% NaOCl = 1.25 lb Cl_2/gal 12.5% NaOCl = 1.04 lb Cl_2/gal	Completely miscible
SULFUR DIOXIDE: SO_2 Dechlorination in disinfection Filter bed cleaning About 1 ppm SO_2 for each ppm Cl_2 (dechlorination) Waste treatment Cr +6 reduction	Liquified gas under pressure	Steel cylinders: 100, 150, 200 lb Green label	Colorless gas Suffocating odor Corrosive Poison Acid in solution: dissolves to form H_2SO_3	----	100% SO_2	760 mm 22.8 at 0°C 16.2 at 10°C 11.3 at 20°C 7.8 at 30°C
SULFURIC ACID: H_2SO_4 (Oil of Vitriol, Vitriol) pH adjustment Activation of silica Neutralization of alkaline wastes	Liquid 66°Be 60°Be 50°Be	Bottles Carboys: 5, 13 gal Drums: 55, 110 gal Bulk T/T, T/C White label	Syrupy liquid Very corrosive Hygroscopic Store dry and cool in tight container pH: 1.2	66°Be 15.1 lb/gal 60°Be 14.2 lb/gal	66°Be 93.2% H_2SO_4 60°Be 77.7% H_2SO_4 50°Be 62.2% H_2SO_4	Completely miscible

Table 14 (Continued)

Chemical Shipping Data and Characteristics

[1]Solubilities are generally given at four different temperatures stated in degrees Centigrade.

Temperature	Fahrenheit Equivalent
0°C	32°F
10°C	50°F
20°C	68°F
30°C	86°F

[2]Each pound of CaO will slake to form 1.16 to 1.32 lb of $CA(OH)_2$ (depending on purity) and from 2 to 12% grit.

[3]"Floodable" as used in this table with dry powder means that, under some conditions, the material entrains air and becomes "fluidized" so that it will flow through small openings, like water.

[4]For small doses of chlorine, use calcium hypochlorite or sodium hypochlorite.

[5]Information about many other coagulant aids (or flocculant aids) is available from Nalco, Calgon, Drew, Betz, North American Mogul, American Cyanamid, Dow, etc.

anhy.	anhydrous	gpg	grains per gallon
aq.	aqueous	ind.	industrial
avail.	available	max.	maximum
avg.	average	M.P.	melting point
bbl.	barrel	min.	minute
B.P.	boiling point	M.W.	molecular weight
C/L	carload	ppm	parts per million
coag.	coagulation	/	per
conc.	concentration	%	percent
cc	cubic centimeter	lb	pound
cu ft	cubic foot	lb/gal	pounds per gallon
°Be	degrees Baume	pulv.	pulverized
°C	degrees Celsius	sat.	saturated
°F	degrees Fahrenheit	soln.	solution
diln.	dilution	sp.g.	specific gravity
esp.	especially	std.	standard
F.P.	freezing point	T/C	tank car
gal	gallon	T/T	tank truck
gm	gram	wt.	weight
in.	inch		

Source: BIF Technical Bulletin Chemicals Used in Treatment of Water and Wastewater. Table modified and reproduced with permission.

Table 15

Chemical-Specific Feeding Recommendations

Feeding Recommendations					
Common Name/ Formula Use	Best Feeding Form	Chemical-to-Water Ratio for Continuous Dissolving[1]	Types of Feeders	Accessory Equipment Required	Suitable Handling Materials for Solutions[2]
ALUM: $A1_2(SO_4)_3 \cdot XH_2O$ Liquid 1 gal 36°Be = 5.38 lb of dry alum: 60°F Coag. at pH 5.5 to 8.0 Sludge conditioner Precipitate PO_4	Full strength under controlled temp. or dilute to avoid crystallization Minimize surface evap.: causes flow problems Keep dry alum below 50% to avoid crystallization	Dilute to between 3% and 15% according to application conditions, mixing, etc.	Solution Rotodip Plunger pump Diaphragm pump 1700 pump L-I-W	Tank gauges or scales Transfer pumps Storage tank Temperature control Eductors or dissolvers for dilution	Lead or rubber-lined tanks, Duriron, FRP[3], Saran, PVC-1, vinyl, Hypalon, Epoxy, 16 ss, Carp. 20 ss, Tyril
ALUMINUM SULFATE: $A1_2(SO_4)3 \cdot 14H_2O$ (Alum, filter alum) Coagulation at pH 5.5 to 8.0 Dosage between 0.5 to 9 gpg Precipitate PO_4	Ground, granular, or rice Powder is dusty, arches, and is floodable[4]	0.5 lb/gal Dissolver detention time 5 min. for ground (10 min. for granules)	Gravimetric Belt L-I-W Volumetric Helix Universal Solution Plunger pump Diaphragm pump 1700 pump	Dissolver Mechanical mixer Scales for volumetric feeders Dust collectors	Lead, rubber, FRP[3], PVC-1, 316 ss, Carp. 20 ss, vinyl, Hypalon Epoxy, Ni-Resist glass, ceramic, polyethylene, Tyril, Uscolite
AMMONIA ANHYDROUS: NH_3 (Ammonia) Chlorine-ammonia treatment Anaerobic digestion Nutrient	Dry gas or as aqueous soln.: see “Ammonia, Aqua”	----	Gas feeder	Scales	Steel, Ni-Resist, Monel, 316 ss, Penton, Neoprene

Table 15 (Continued)

Chemical-Specific Feeding Recommendations

Feeding Recommendations					
Common Name/ Formula Use	Best Feeding Form	Chemical-to-Water Ratio for Continuous Dissolving[1]	Types of Feeders	Accessory Equipment Required	Suitable Handling Materials for Solutions[2]
AMMONIA, AQUA: NH_4OH (Ammonium hydroxide, ammonia water, ammonium hydrate) Chlorine-ammonia treatment pH control Nutrient	Full strength	----	Solution L-I-W Diaphragm pump Plunger pump Bal. diaphragm pump	Scales Drum handling equipment or storage tanks Transfer pumps	Iron, steel, rubber, Hypalon, 316 ss, Tyril (room temp. to 28%)
CALCIUM HYDROXIDE: $Ca(OH)_2$ (Hydrated lime, slaked lime) Coagulation, softening pH adjustment Waste neutralization Sludge conditioning Precipitate PO_4	Finer particle sizes more efficient, but more difficult to handle and feed	Dry feed: 0.5 lb/gal max. Slurry: 0.93 lb/gal (i.e., a 10% slurry) (Light to a 20% conc. max.) (Heavy to a 25% conc. max.)	Gravimetric L-I-W Belt Volumetric Helix Universal Slurry Rotodip Diaphragm Plunger pump[5]	Hopper agitators Non-flood rotor under large hoppers Dust collectors	Rubber hose, iron, steel, concrete, Hypalon, Penton, PVC-1 No lead
CALCIUM HYPOCHLORITE: $Ca(OCl)_2 \cdot 4H_2O$ (H.T.H., Perchloron, Pittchlor) Disinfection Slime control Deodorization	Up to 3% soln. max. (practical)	0.125 lb/gal makes 1% soln. of available Cl_2	Liquid Diaphragm pump Bal. diaphragm pump Rotodip	Dissolving tanks in pairs with drains to draw off sediment Injection nozzle Foot valve	Ceramic, glass, rubber-lined tanks, PVC-1, Penton, Tyril (rm. temp.), Hypalon, vinyl, Usco-lite (rm. temp), Saran, Hastelloy C (good). No tin.

Table 15 (Continued)

Chemical-Specific Feeding Recommendations

Feeding Recommendations					
Common Name/ Formula Use	Best Feeding Form	Chemical-to-Water Ratio for Continuous Dissolving[1]	Types of Feeders	Accessory Equipment Required	Suitable Handling Materials for Solutions[2]
CALCIUM OXIDE: CaO (Quicklime, burnt lime, chemical lime, unslaked lime) Coagulation Softening pH adjustment Waste neutralization Sludge conditioning Precipitate PO_4	1/4 to 3/4 in. pebble lime Pellets Ground lime arches and is floodable Pulv. will arch and is floodable Soft burned, porous best for slaking	2.1 lb/gal (range from 1.4 to 3.3 lb/gal according to slaker, etc.) Dilute after slaking to 0.93 lb/gal (10%) max. slurry	Gravimetric Belt L-I-W Volumetric Universal Helix	Hopper agitator and non-flood rotor for ground and pulv. lime Recording thermometer Water proportioner Lime slaker High temperature safety cut-out and alarm	Rubber, iron, steel, concrete, Hypalon, Penton, PVC-1
CARBON, ACTIVATED: C (Nuchar, Norit, Darco, Carbodur) Decolorizing, taste and odor removal Dosage between 5 and 80 ppm	Powder: with bulk density of 12 lb/cu ft Slurry: 1 lb/gal	According to its bulkiness and wetability, a 10 to 15% solution would be the max. concen.	Gravimetric L-I-W Volumetric Helix Rotolock Slurry Rotodip Diaphragm pumps	Washdown-type wetting tank Vortex mixer Hopper agitators Non-flood rotors Dust collectors Large storage cap. for liquid feed Tank agitators Transfer pumps	316 ss, rubber, bronze, Monel, Hastelloy C, FRP[3], Saran, Hypalon

Table 15 (Continued)

Chemical-Specific Feeding Recommendations

Feeding Recommendations					
Common Name/ Formula Use	Best Feeding Form	Chemical-to-Water Ratio for Continuous Dissolving[1]	Types of Feeders	Accessory Equipment Required	Suitable Handling Materials for Solutions[2]
CHLORINE: Cl_2 (Chlorine gas, liquid chlorine) Disinfection Slime control Taste and odor control Waste treatment Activation of silica[6]	Gas: vaporized from liquid	1 lb to 45-50 gal or more	Gas chlorinator	Vaporizers for high capacities Scales Gas masks Residual analyzer	Anhy. liquid or gas: Steel, copper, black iron Wet gas: Penton, Viton, Hastelloy C, PVC-1 (good), silver, Tantalum Chlorinated H_2O: Saran, stoneware, Carp. 20 ss, Hastelloy C, PVC-1, Viton, Uscolite, Penton
CHLORINE DIOXIDE: ClO_2 Disinfection Taste and odor control (especially phenol) Waste treatment 0.5 to 5 lb $NaClO_2$ per million gal H_2O dosage	Solution from generator Mix discharge from chlorinizer and $NaClO_2$ solution or add acid to mixture of $NaClO_2$ and NaOCl. Use equal concentrations: 2% max.	Chlorine water must contain 500 ppm or over of Cl_2 and have a pH of 3.5 or less Water use depends on method of preparation	Solution Diaphragm pump	Dissolving tanks or crocks Gas mask	For solutions with 3% ClO_2: Ceramic, glass, Hypalon, PVC-1, Saran, vinyl, Penton, Teflon

Table 15 (Continued)

Chemical-Specific Feeding Recommendations

Feeding Recommendations					
Common Name/ Formula Use	Best Feeding Form	Chemical-to-Water Ratio for Continuous Dissolving[1]	Types of Feeders	Accessory Equipment Required	Suitable Handling Materials for Solutions[2]
FERRIC CHLORIDE: $FeCl_3$ - anhydrous $FeCl_3$ - $6H_2O$ = crystal $FeCl_3$ - solution (Ferrichlor, chloride or iron) Coagulation pH 4 to 11 Dosage: 0.3 to 3 gpg (sludge cond. 1.5 to 4.5% $FeCl_3$) Precipitate PO_4	Solution or any dilution up to 45% $FECl_3$ content (anhy. form has a high heat of soln.)	Anhy. to form: 45%: 5.59 lb/gal 40%: 4.75 lb/gal 35%: 3.96 lb/gal 30%: 3.24 lb/gal 20%: 1.98 lb/gal 10%: .91 lb/gal (Multiply $FeCl_3$, by 1.666 to obtain $FeCl_3.6H_2O$ at 20°C)	Solution Diaphragm pump Rotodip Bal. diaphragm pump	Storage tanks for liquid Dissolving tanks for lumps or granules	Rubber, glass, ceramics, Hypalon, Saran, PVC-1, Penton, FRP[3], vinyl, Epoxy, Hastelloy C (good to fair), Usco-lite, Tyril (Rm)
FERRIC SULFATE: $Fe_2(SO_4)_3 \cdot 3H_2O$ (Ferrifloc) $Fe_2(SO_4)_3 \cdot 2H_2O$ (Ferriclear) (Iron sulfate) Coag. pH 4-6 & 8.8-9.2 Dosage: 0.3 to 3 gpg Precipitate PO_4	Granules	2 lb/gal (range) 1.4 to 2.4 lb/gal for 20 min. detention (warm water permits shorter detention) Water insolubles can be high	Gravimetric L-I-W Volumetric Helix Universal Solution Diaphragm pump Bal. diaphragm pump Plunger pump Rotodip	Dissolver with motor-driven mixer and water control Vapor remover solution tank	316 ss, rubber, glass, ceramics, hypalon, Saran, PVC-1, vinyl, Carp. 20 ss, Penton, FRP[3], Epoxy, Tyril
FERROUS SULFATE: $FeSO_4 \cdot 7H_2O$ (Copperas, iron sulfate, sugar sulfate, green vitroil) Coag. at pH 8.8 to 9.2 Chrome reduction in waste treatment Sewage odor control Precipitate PO_4	Granules	0.5 lb/gal (dissolver detention time 5 min. minimum)	Gravimetric L-I-W Volumetric Helix Universal Solution Diaphragm pump Plunger pump Bal. diaphragm pump	Dissolvers Scales	Rubber, FRP[3], PVC-1, vinyl, Penton, Epoxy, Hypalon, Uscolite, ceramic, Carp. 20 ss, Tyril

Table 15 (Continued)

Chemical-Specific Feeding Recommendations

Feeding Recommendations					
Common Name/ Formula Use	Best Feeding Form	Chemical-to-Water Ratio for Continuous Dissolving[1]	Types of Feeders	Accessory Equipment Required	Suitable Handling Materials for Solutions[2]
HYDROGEN PEROXIDE: H_2O_2 Odor control	Full strength or any dilution	----	Diaphragm pump Plunger pump	Storage tank, water metering and filtration device for dilution	Aluminum, Hastelloy C, titanium, Viton, Kel-F, PTFE, CPVC
METHANOL: CH3•OH Wood alcohol denitrification	Full strength or any dilution	----	Gear pump Diaphragm pump	Storage tank	304 ss, 316 ss, brass, bronze, Carpenter 20, cast iron, Hastelloy C, buna N, EPDM, Hypalon, natural rubber, PTFE, PVDF, NORYL, Delrin, CPVC
OZONE: O_3 Taste and odor control Disinfection Waste treatment Odor: 1 to 5 ppm Disinfection: 0.5 to 1 ppm	As generated Approx. 1% ozone in air	Gas diffused in water under treatment	Ozonator	Air-drying equipment Diffusers	Glass, 316 ss, ceramics, aluminum, Teflon
PHOSPHORIC ACID, ORTHO: H_3PO_4 Boiler water softening Alkalinity reduction Cleaning boilers Nutrient feeding	50 to 75% conc. (85% is syrupy; 100% is crystalline)	----	Liquid Diaphragm pump Bal. diaphragm pump Plunger pump	Rubber gloves	316 St. (no F) Penton, rubber FRP[3], PVC-1, Hypalon, Viton Carp. 20 ss, Hastelloy C

Table 15 (Continued)
Chemical-Specific Feeding Recommendations

Feeding Recommendations					
Common Name/ Formula Use	Best Feeding Form	Chemical-to-Water Ratio for Continuous Dissolving[1]	Types of Feeders	Accessory Equipment Required	Suitable Handling Materials for Solutions[2]
POLYMERS, DRY[7] High M.W. synthetic polymers	Powdered, flattish granules	Max. conc. 1% Feed even stream to vigorous vortex (mixing too fast will retard colloidal growth) 1 to 2 hours detention	Gravimetric L-I-W Volumetric Helix Solution (Colloidal) Diaphragm pump Plunger pump Bal. diaphragm pump	Special dispersing procedure Mixer: may hang up; vibrate if needed	Steel, rubber, Hypalon, Tyril Noncorrosive, but no zinc Same as for H_2O of similar pH or according to its pH
POLYMERS, LIQUID AND EMULSIONS[7] High M.W. synthetic polymers Separan NP10 potable grade, Magnifloc 990; Purifloc N17 Ave. Dosage: 0.1 to 1 ppm	Makedown to: Liquid: 0.5% to 5% Emulsions: 0.05% to 0.2%	Varies with charge type	Diaphragm pump Plunger pump Bal. diaphragm pump	Mixing and aqueous tanks may be required	Same as dry products
POTASSIUM PERMANGANATE: KMnO4 Cairox Taste odor control 0.5 to 4.0 ppm Removes Fe and Mn at a 1-to-1 ratio	Crystals plus anticaking additive	1.0% conc. (2.0% max.)	Gravimetric L-I-W Volumetric Helix Solution Diaphragm pump Plunger pump Bal. diaphragm pump	Dissolving tank Mixer Mechanical	Steel, iron (neutral & alkaline) 316 st. PVC-1, FRP[3], Hypalon, Penton, Lucite, rubber (alkaline)

Table 15 (Continued)
Chemical-Specific Feeding Recommendations

Feeding Recommendations					
Common Name/ Formula Use	Best Feeding Form	Chemical-to-Water Ratio for Continuous Dissolving[1]	Types of Feeders	Accessory Equipment Required	Suitable Handling Materials for Solutions[2]
SODIUM ALUMINATE: $Na_2Al_2O_4$, anhy. (soda alum) Ratio Na_2O/Al_2O_3 1/1 or 1.15/1 (high purity) Also $Na_2A1_2O_4 \cdot 3H_2O$ hydrated form Coagulation Boiler H_2O treatment	Granular or soln. as received Std. grade produces sludge on dissolving	Dry 0.5 lb/gal Soln. dilute as desired	Gravimetric L-I-W Volumetric Helix Universal Solution Rotodip Diaphragm pump Plunger pump	Hopper agitators for dry form	Iron, steel, rubber, 316 st. s., Penton, concrete, Hypalon
SODIUM BICARBONATE: $NaHCO_3$ (baking soda) Activation of silica pH adjustment	Granules or powder plus TCP (0.4%)	0.3 lb/gal	Gravimetric L-I-W Belt Volumetric Helix Universal Solution Rotodip Diaphragm pump Plunger pump	Hopper agitators and non-flood rotor for powder, if large storage hopper	Iron & steel (dilute solns.: caution), rubber, Saran, st. steel, Hypalon, Tyril
SODIUM BISULFITE, ANHYDROUS: $Na_2S_2O_5$ ($NaHSO_3$) (Sodium pyrosulfite, sodium meta-bisulfite) Dechlorination: about 1.4 ppm for each ppm $C1_2$ Reducing agent in waste treatment (as Cr)	Crystals (do not let set) Storage difficult	0.5 lb/gal	Gravimetric L-I-W Volumetric Helix Universal Solution Rotodip Diaphragm pump Plunger pump Bal. diaphragm pump	Hopper agitators for powdered grades Vent dissolver to outside	Glass, carp. 20 ss, PVC-1, Penton, Uscolite, 316 st., FRP[3], Tyril, Hypalon

Table 15 (Continued)
Chemical-Specific Feeding Recommendations

Feeding Recommendations					
Common Name/ Formula Use	Best Feeding Form	Chemical-to-Water Ratio for Continuous Dissolving[1]	Types of Feeders	Accessory Equipment Required	Suitable Handling Materials for Solutions[2]
SODIUM CARBONATE: Na_2CO_3 (Soda ash: 58% Na_2O) Water softening pH adjustment	Dense	Dry feed 0.25 lb/gal for 10 min. detention time, 0.5 lb/gal for 20 min. Soln. feed 1.0 lb/gal Warm H_2O and/or efficient mixing can reduce detention time if mat. has not sat around too long and formed lumps—to 5 min.	Gravimetric L-I-W Volumetric Helix Solution Diaphragm pump Bal. diaphragm pump Rotodip Plunger pump	Rotolock for light forms to prevent flooding Large dissolvers Bin agitators for medium or light grades and very light grades	Iron, steel, rubber, Hypalon, Tyril
SODIUM CHLORITE: $NaClO_2$ (Technical sodium chlorite) Disinfection, taste, and odor control Ind. waste treatment (with Cl_2 produces ClO_2)	Soln. as received	Batch solns. 0.12 to 2 lb/gal	Solution Diaphragm Rotodip	Chlorine feeder and chlorine dioxide generator	Penton, glass, Saran, PVC-1, vinyl, Tygon, FRP[3], Hastelloy C (fair), Hypalon, Tyril
SODIUM HYDROXIDE: NaOH (Caustic soda, soda lye) pH adjustment, neutralization	Solution feed	NaOH has a high heat of soln.	Solution Plunger pump Diaphragm pump Bal. diaphragm pump Rotodip	Goggles Rubber gloves Aprons	Cast iron, steel For no contam., use Penton, rubber, PVC-1, 316 st., Hypalon

Table 15 (Continued)
Chemical-Specific Feeding Recommendations

Feeding Recommendations					
Common Name/ Formula Use	Best Feeding Form	Chemical-to-Water Ratio for Continuous Dissolving[1]	Types of Feeders	Accessory Equipment Required	Suitable Handling Materials for Solutions[2]
SODIUM HYPOCHLORITE: NaOCl (Javelle water, bleach liquor, chlorine bleach) Disinfection, slime control Bleaching	Solution up to 16% Available Cl_2 conc.	1.0 gal of 12.5% (avail. Cl_2) soln. to 12.5 gal of water gives a 1% avail. Cl_2 soln.	Solution Diaphragm pump Rotodip Bal. diaphragm pump	Solution tanks Foot valves Water meters Injection nozzles	Rubber, glass, Tyril, Saran, PVC-1, vinyl, Hastelloy C, Hypalon
SULFUR DIOXIDE: SO_2 Dechlorination in disinfection Filter bed cleaning About 1 ppm SO_2 for each ppm Cl_2 (dechlorination) Waste treatment Cr +6 reduction	Gas	----	Gas Rotameter SO_2 feeder	Gas mask	Wet gas: Glass, Carp. 20 ss, PVC-1, Penton, ceramics, 316 (G), Viton, Hypalon
SULFURIC ACID: H_2SO_4 (Oil of Vitriol, Vitriol) pH adjustment Activation of silica Neutralization of alkaline wastes	Soln. at desired dilution H_2SO_4 has a high heat of soln.	Dilute to any desired conc.: NEVER add water to acid but rather always add acid to water.	Liquid Plunger pump Diaphragm pump Bal. diaphragm pump Rotodip	Goggles Rubber gloves Aprons Dilution tanks	Conc.>85%: Steel, iron, Penton, PVC-1 (good), Viton 40 to 85%: Carp. 20, PVC-1, Penton, Viton 2 to 40%: Carp. 20, FRP[3], glass, PVC-1, Viton

Table 15 (Continued)

Chemical-Specific Feeding Recommendations

[1]To convert gm/100 mL to lb/gal, multiply figure (for gm/100 mL) by 0.083. Recommended strengths of solutions for feeding purposes are given in pounds of chemical per gallon of water (lb/gal) and are based on plant practice for the commercial product.

The following table shows the number of pounds of chemical to add to 1 gallon of water to obtain various percent solutions:

% Soln.	lb/gal	% Soln.	lb/gal	% Soln.	lb/gal
0.1	0.008	2.0	0.170	10.0	0.927
0.2	0.017	3.0	0.258	15.0	1.473
0.5	0.042	5.0	0.440	20.0	2.200
1.0	0.084	6.0	0.533	25.0	2.760
				30.0	3.560

[2]Iron and steel can be used with chemicals in the dry state unless the chemical is deliquescent or very hygroscopic, or in a dampish form and is corrosive to some degree.

[3]FRP, in every case, refers to the chemically resistant grade (bisphenol A+) of fiberglass reinforced plastic.

[4]"Floodable" as used in this table with dry powder means that, under some conditions, the material entrains air and becomes "fluidized" so that it will flow through small openings, like water.

[5]When feeding rates exceed 100 lb/hr, economic factors may dictate use of calcium oxide (quicklime).

[6]For small doses of chlorine, use calcium hypochlorite or sodium hypochlorite.

[7]Information about many other coagulant aids (or flocculant aids) is available from Nalco, Calgon, Drew, Betz, North American Mogul, American Cyanamid, Dow, etc.

anhy.	anhydrous	in.	inch
approx.	approximate	ind.	industrial
aq.	aqueous	L-I-W	loss in weight
avail.	available	max.	maximum
avg.	average	M.P.	melting point
bbl.	barrel	min.	minute
B.P.	boiling point	M.W.	molecular weight
C/l	carload	ppm	parts per million
coag.	coagulation	/	per
conc.	concentration	%	percent
cc	cubic centimeter	lb	pound
cu ft	cubic foot	lb/gal	pounds per gallon
CVPC	chlorinated polyvinylchloride	Proportioner	proportioning pump
°Be	degrees Baume	pulv.	pulverized
°C	degrees Celsius	PVC	polyvinyl chloride
°F	degrees Fahrenheit	sat.	saturated
diln.	dilution	soln.	solution
esp.	especially	sp.g.	specific gravity
F.P.	freezing point	std.	standard
FRP	fiberglass reinforced plastic	T/C	tank car
gal	gallon	T/T	tank truck
gm	gram	wt.	weight

Source: BIF Technical Bulletin Chemicals Used in Treatment of Water and Wastewater. Table modified and reproduced with permission.

Section 9: EFFLUENT DISPOSAL/RECLAMATION

9.1 Introduction. Two primary means of effluent disposal and reclamation are surface water discharge and land application. Rapidly growing technologies for disposal and reuse include groundwater recharge and aquifer storage and recovery. WEF MOP 8, Chapter 20, covers the applicability, pretreatment, methodology, design, and regulatory issues involved with land application. This handbook covers the design of surface water discharge outfalls and discusses the emerging groundwater recharge and aquifer storage and recovery technologies.

9.2 Surface Water Discharge Outfalls. Permit compliance can be facilitated by the judicious selection and design of a surface water outfall. Often the receiving water is already dictated by the location of the FOTW or existing facilities. In some cases, the outfall can be relocated or modified to improve the ability of the FOTW to remain in permit compliance without major treatment process changes. This section reviews some general issues to consider about surface water outfalls. Additional design references include Mixing in Inland and Coastal Waters, Fischer et al., 1979, and Wastewater Engineering: Treatment, Disposal, and Reuse, Metcalf & Eddy, 1991.

9.2.1 Outfall Location. A surface water discharge cannot impair the receiving water quality below the state’s water quality standard. This is typically determined through a waste load allocation study. This study evaluates the assimilative capacity of the water body. Receiving waters with little flushing, like lakes, or which are dominated by effluent, like small creeks, are only used as a last alternative. If a larger water body with more dilution capability is nearby, then it may be necessary to pipe the FOTW effluent to this larger water. Note that new open ocean outfalls in the Atlantic Ocean and Gulf of Mexico are highly discouraged by EPA. After the general location of the outfall in the receiving water has been determined, then more specific design details are evaluated.

9.2.2 Outfall Configuration. The configuration of the outfall pipe itself can sometimes be changed to improve permit compliance. For example, if the waste load allocation determines that the effluent is causing dissolved oxygen depletion, a cascading structure along a stream bank can be used to satisfy some of the effluent’s oxygen demand. However, often the outfall

is submerged and away from shore. If a pipe has a simple open end, then better mixing can be attained by installing a diffuser that induces jet flow from one or more ports. The permit should include the dilution or mixing effect to help the FOTW to achieve compliance. For a new discharge, these same issues may arise. The regulatory agency will often have a major role in requiring the level of dispersion and mixing necessary to reduce the potential environmental effects.

9.2.3 Sizing/Capacity. The design of the outfall should be conducted for peak hour flow at the maximum anticipated stage of the receiving water. If the receiving water is tidal, then both high and low conditions should be evaluated. The outfall pipeline size should follow typical pipeline design guides for these types of structures. If a diffuser is installed, then special mixing models are used to select the port sizes and spacing. While pipelines typically have flows of less than 10 fps (3 m/s), diffuser ports require velocities greater than 10 fps (3 m/s) to achieve jet mixing. The ports on diffusers should be directed slightly upward so flow does not impinge on the water body bottom. Port sizes should be 2 inches (5 cm) in diameter or greater to ensure that the ports will not be clogged by scaling or barnacles.

Pipes can be made of various materials, but most outfalls constructed today use either ductile iron or plastic. Corrosion protection should be considered if applicable (see Section 12). High-density polyethylene (HDPE) pipe is often used for submerged outfalls that are buried (see par. 9.2.5). Note that HDPE is specified by its outer diameter, while other types of plastic or iron pipe are specified by their inner diameter.

9.2.4 Outfall Depth. Most outfalls are submerged to avoid visibility and interference with water body usage. Outfalls are located away from the shoreline to minimize contact with shallow water benthic organisms and to provide better mixing, as long as they do not interfere with dredged navigation channels. The deeper the outfall, the better the mixing. Outfalls need to be at least 8 feet (2.4 m) deep to provide mixing opportunity. Consider extending the pipeline to deeper water if an existing outfall is in shallow water, is having permit compliance issues, and could be extended. Shallow outfalls do not need to be modified if the regulatory authorities do not require it.

9.2.5 Outfall Protection. Outfall pipelines should be anchored in place in the receiving water to prevent movement.

Anchoring is often accomplished by burying the pipeline and using a 90-degree elbow at the end to surface the outfall. Multiport outfalls may have risers along the pipeline extending above the buried pipeline. Piers can be used to support the outfall for some of the distance from shore, but the pipeline extending beyond the pier (to avoid public contact) needs anchoring. Sometimes pipes have collar-type concrete weights that can be partially submerged with jets to anchor the pipeline. Sometimes rip-rap is used to stabilize and provide ballast for the pipeline sitting on the bottom grade. Abovegrade pipelines can experience sedimentation and scour forces which need to be considered by the designer.

Address COE requirements and state ownership of the water body during design. If the pipeline is too shallow, it can interfere with boat traffic. Some regulatory agencies will allow a shallow outfall if it is marked with lighted warning buoys or by other means. The transition zones near the shoreline will need special consideration during design and construction, since these are often the most environmentally sensitive and publicly visible areas.

9.3 Groundwater Recharge. Groundwater recharge can be accomplished by the use of infiltration basins or through underground injection wells.

9.3.1 Infiltration Basins. Artificial recharge of groundwater can be achieved with infiltration basins if soils are permeable, a sufficient portion of the aquifer is unsaturated, and the aquifer is unconfined.

9.3.1.1 Applications Guidance. Design and management of infiltration basins should be adapted to local conditions of water quality, climate, soil, hydrogeology, and environmental constraints. Aspects to be considered include water depth (in reference to possible increase in infiltration rates), length of flooding and drying periods, frequency of cleaning basins, and pre-sedimentation. Also, a selection between basins with stagnant water (where fine materials are able to settle) or basins with flowing water (where fine materials are kept suspended because of turbulence) should be made. Chemical and biological water quality parameters of the effluent water need to be considered. Also consider changes in water quality as the water moves through the vadose zone and aquifer, and potential leaching of trace elements from the vadose zone. A groundwater

monitoring program may be required based on Federal or state regulations and depending on the quality of the effluent discharged to the basins. Proximity of public drinking water wells may also affect the groundwater monitoring requirements. Refer to Artificial Recharge of Groundwater, A.I. Johnson and Donald J. Finlayson, eds., 1988.

9.3.1.2 General Design Guidance. Infiltration systems for artificial recharge of groundwater should consist of a number of basins, in cases where hydraulic loading rates need to be maximized. Depending on topography, such basins can have a surface area of 0.25 to 25 acres (0.10 to 10 hectares) or more. Each basin requires its own water supply and drainage so that it can be flooded, dried, and cleaned according to the best schedule for that basin. Basins should not be placed in series so that the outflow from one basin is the inflow for the lower basin because in such systems the basins cannot be dried and cleaned individually. Design the overall system to allow any basin to be taken out of service for a sufficient drying period. The first few basins are sometimes designed to be used as pre-sedimentation basins. Some basins, particularly deep or low infiltration basins, should be designed with separate drainage systems, which allow quick de-watering for drying and cleaning. Construct basins with horizontal or well-graded bottoms to prevent low places where water can stand for long periods and interfere with infiltration recovery and cleaning operations.

In cases where groundwater mounds could rise above the bottom of the infiltration facilities, the basins should be laid out to minimize the inundated area. Groundwater flow modeling, using readily available models such as MODFLOW, may be required to evaluate potential mounding effects during the design. The basins should be small or long and narrow. Adjacent basins should not be flooded at the same time. Refer to EPA 625/1-81-013a, Process Design Manual for Land Treatment of Municipal Wastewater, Supplement on Rapid Infiltration and Overland Flow.

9.3.2 Injection Wells. Many successful injection well systems, which inject moderately to highly treated wastewater, have been constructed across the United States. Many of these systems are located in California, Texas, and Florida. Injection wells are characterized under five general categories (Class I, II, III, IV, or V) based on the type of waste stream, well design, use of well, and hydrogeologic characteristics at the injection site. Florida’s injection well classifications, which

are modeled after the Federal classifications, are presented in Table 16. Refer to Groundwater Recharge Using Waters of Impaired Quality, National Research Council, 1994.

9.3.2.1 Applications Guidance. Recharge wells are potentially applicable in areas where surface soils are not available, land is too costly, wastewater flows are excessive, wastewater quality is unacceptable for infiltration basins, drinking water wells are in close proximity to wastewater treatment facilities, or vadose zones have restricting layers or undesirable chemicals that could leach out. For these conditions, among others, injection wells are an option. Domestic and industrial wastewater injection wells typically recharge brackish to saline water aquifers or aquifers of otherwise poor water quality. The injection wells may also be used to develop a barrier to saltwater intrusion in coastal areas using highly treated wastewater. Wastewater to be used for underground injection undergoes various levels of pretreatment, up to and including advanced wastewater treatment processes. The interaction between the injection water and the native groundwater, including a full characterization of each, should be well understood. This characterization is typically based on Federal (and often state) drinking water standards.

9.3.2.2 General Design Guidance. Several general design criteria should be evaluated when designing an injection well system and before construction:

a) Well completion details, including type of casing material on well and screen, if used (e.g., carbon steel, stainless steel, polyvinylchloride [PVC], etc.), approximate casing setting depths, casing diameters (generally designed for fluid velocities of 8 fps [2.4 m/s] or less), necessity of tubing and packer, and whether well is screened or open borehole.

b) Pump station design.

c) Wellhead piping and appurtenances (including flow and pressure monitoring equipment).

d) A hydrogeologic drilling and testing program to collect and analyze aquifer data (e.g., packer testing, coring, specific capacity testing, geophysical logging program, and water quality sampling).

Table 16
Classifications of Injection Wells

Class	Description
I	1. Wells used by generators of hazardous wastes or owners or operators of hazardous waste management facilities to inject hazardous waste beneath the lowermost formation containing, within one-quarter mile of the well bore, an underground source of drinking water. 2. Other industrial and municipal (publicly or privately owned) disposal wells which inject fluids beneath the lowermost formation containing, within one-quarter mile of the well bore, an underground source of drinking water.
II	Wells that inject fluids: 1. That are brought to the surface in connection with conventional oil or natural gas production and may be commingled with wastewaters from gas plants which are an integral part of production operations, unless those waters are classified as a hazardous waste at the time of injection. 2. For enhanced recovery of oil or natural gas. 3. For storage of hydrocarbons that are liquid at standard temperature and pressure.
III	Wells that inject for extraction of minerals, including: 1. Mining of sulfur by the Frasch process. 2. Solution mining of minerals. (Note: Solution mining of minerals includes sodium chloride, potash, phosphate, copper, uranium, and any other mineral that can be mined by this process.)

Table 16 (Continued)
Classifications of Injection Wells

Class	Description
IV	Wells used by generators of hazardous wastes or of radioactive wastes, by owners or operators of hazardous waste management facilities, or by owners or operators of radioactive waste disposal sites to dispose of hazardous wastes or radioactive wastes into or above a formation which, within one-quarter mile of the well, contains either an underground source of drinking water or an exempted aquifer. (Note: These types of injection wells are banned nationwide.)
V	Injection wells not included in Class I, II, III, or IV. Class V wells, which are grouped by expected quality of the injection fluid, include: Group 1 a. Air-conditioning return flow wells used to return to any aquifer the water used for heating or cooling. An air-conditioning supply well, heat pump, and return flow well used to inject water containing no additives into the same permeable zone from which it was withdrawn constitute a closed-loop system. b. Cooling water return flow wells used to inject water previously used for cooling. Group 2 a. Recharge wells used to replenish, augment, or store water in an aquifer. b. Saltwater intrusion barrier wells used to inject water into a freshwater aquifer to prevent the intrusion of saltwater into the freshwater.

Table 16 (Continued)
Classifications of Injection Wells

Class	Description
V	c. Subsidence control wells (not used for the purpose of oil or natural gas production) used to inject fluids into a zone that does not produce oil or gas to reduce or eliminate subsidence associated with the overdraft of fresh water. d. Connector wells used to connect two aquifers to allow interchange of water between those aquifers. Group 3 a. Wells that are part of domestic waste treatment systems. b. Swimming pool drainage wells. c. Devices receiving wastes, which have an open bottom and sometimes have perforated sides. This rule does not apply to single-family residential waste disposal systems. d. Wells used to inject spent brine into the same formation from which it was withdrawn after extraction of halogens or their salts. e. Injection wells used in experimental technologies. Group 4 a. Dry wells used to inject wastes into a subsurface formation. b. Sand backfill wells used to inject a mixture of water and sand, tailings, or other solids into mined-out portions of subsurface mines. c. Wells other than Class IV used to inject radioactive waste, provided the concentrations of the waste do not exceed drinking water standards contained in Chapter 62-550, F.A.C.

Table 16 (Continued)
Classifications of Injection Wells

Class	Description
V	d. Injection wells used for in situ recovery of phosphate, uraniferous sandstone, clay, sand, and other minerals extracted by the borehole slurry mining method.
	Group 5 a. Drainage wells used to drain surface fluid, primarily storm runoff or lake level (by gravity flow) into a subsurface formation.
	Group 6 a. Injection wells associated with the recovery of geothermal energy for heating, aqua-culture, and production of electric power.
	b. Other wells.

e) Classification and permitting requirements of injection well (which will likely require a complete characterization of the wastewater to determine which aquifer systems are acceptable for underground injection).

f) A groundwater monitoring program (if applicable) to demonstrate compliance with Federal Underground Injection Control (UIC) rules. This program may include several monitoring wells completed to various depths, designed to monitor possible migration of the injected fluids).

g) Additional design considerations, including high well level alarms, continuous head monitoring, downhole flow metering per individual well, and potential groundwater geochemical interactions.

9.3.2.3 Design Details Determined During Installation. Several final design details are determined during well installation, including the following:

a) Types and quantities of cement to fill annular space to prevent fluid migration.

b) Final casing setting depths.

c) Information to determine if any state or Federal relief mechanisms are needed to operate the system (e.g., aquifer exemptions).

d) Operational testing of the injection system to obtain the appropriate operating permit(s). State and Federal UIC rules require strict compliance to provide maximum assurance that underground sources of drinking water (defined as, among other criteria, aquifers containing 10,000 mg/L or less total dissolved solids) will not be negatively impacted by underground injection of domestic wastewater.

A useful reference to assist with well design criteria is Ground Water and Wells, UOP Inc., 1975.

9.3.2.4 Operational Considerations. There are several operational considerations when designing an injection well. One possible concern with injection wells may be clogging of the aquifer around the well, especially at the borehole interface between the gravel pack (if used) and the borehole wall. Suspended solids can accumulate and bacterial growth tends to concentrate in this area. Other processes that can decrease injection rates in wells are precipitation of calcium carbonate, iron oxides, and other compounds in the aquifer; dispersion and swelling of clay; and air binding.

Injection wells are more vulnerable to clogging than surface infiltration because the infiltration rates are much higher. Clogging effects can be remediated by several methods, including periodic pumping of the wells to reverse the flow and potentially dislodge clogging materials, or acidization of the injection well. When the wells are pumped, the initial flow is typically brown and odorous and is recycled through the treatment plant. Pumping schedules may range from 20 minutes per day to several times per year. If pumping does not restore the injection rate, redevelopment of the well may be necessary. The best strategy for dealing with clogging is to prevent it by proper treatment of the water before injection. Limiting the loading of suspended solids, assimilable organic carbon, nutrients such as nitrogen and phosphorus, and microorganisms may

reduce the potential for clogging. Chlorination of the wastewater may be effective at minimizing microbiological activity.

Acidization of the well is a process that involves injecting a concentrated acid solution (typically hydrochloric acid) down the well, shutting-in the well, allowing the acid to react with the formation, then back-flushing the well or continuing injection. Acidization is a very effective method of restoring injection capacities in carbonate aquifer systems. Another operational consideration is mechanical integrity (MI) testing of the wells, which includes internal MI demonstrations (to show no fluid movement is occurring due to leaks in the casing) and external MI demonstrations (to show no annular fluid movement is occurring around the casings installed). Most injection wells require MI demonstrations every 5 years at a minimum. See Ground Water Protection Council Class II Injection Well Mechanical Integrity Testing Basic Training Course, Ground Water Protection Council, 1994, for MI design criteria and available technologies. The wells should be designed to allow effective and economical well rehabilitation and testing activities to be performed on a routine or permit-driven basis.

9.4 Aquifer Storage Recovery. Application or consideration of this technology will require command or higher headquarters approval. Aquifer storage recovery (ASR) stores water in a suitable aquifer through a well during times when excess water is available; the same water is later recovered through the same well during times when it is needed. Most ASR applications in operation today are for seasonal, long-term, or emergency storage of potable (drinking) water. No ASR systems using treated wastewater are known to exist; however many systems in Florida are in various stages of development. Federal regulations for reclaimed-water ASR systems are pending, although several state programs, including Florida, are in the final stages of development. In fact, Florida’s reuse rules currently under revision are encouraging and promoting reclaimed-water ASR programs to provide seasonal storage of this increasingly valuable commodity, allowing wastewater treatment plant operators to more effectively manage their reclaimed water systems. Refer to Groundwater Recharge and Wells, a Guide to Aquifer Storage Recovery, David Pyne, 1994.

9.4.1 Applications Guidance. High-quality reclaimed water may be stored seasonally in brackish aquifers for later recovery

to meet irrigation or other demands. With ASR technology, the water is stored in the subsurface to be used at a later date. Possible ASR applications include storing and recovering water to meet diurnal variations in supply and demands, banking reclaimed water to meet demands during extended drought periods or when the quality of the water is not acceptable for the reuse application, or strategically locating the ASR system in locations where flow or pressure constraints are inherent in the reuse system. The reclaimed water stored in an ASR system could be blended with brackish water resources under certain applications to maximize the use of freshwater and brackish water in an area with limited water resources. Additional aquifer treatment could occur under certain hydrogeologic conditions which may enhance reclaimed water quality. Advanced treatment of the stored or recovered water could allow a wide range of applications, including indirect potable reuse with treatment of the water to drinking water standards. Under most applications, ASR provides additional reliability and operational flexibility for the overall reuse system.

9.4.2 General Design Guidance. See par. 9.3.1.2 for pertinent information concerning design of ASR wells.

a) Design of ASR wells differ from typical effluent disposal wells in several areas:

(1) ASR wells are typically shallower than disposal wells, completed in a less saline receiving zone.

(2) ASR wells are designed to maximize storage and recovery versus maximizing disposal capacity.

(3) Confinement to prevent fluid movement is not typically as stringent since reclaimed water quality is generally very good and, because of the mode of operation (recharge and recovery), fewer areas are typically affected.

(4) ASR wells require installation of a pump and motor in the well since they are operated as a “production well” during recovery periods.

(5) A small aboveground storage facility may be required for an ASR system to meet diurnal variations in reclaimed water demands.

(6) Wellheads and associated piping are modified to allow for bi-directional versus single direction flow. Note that with ASR, plugging issues are of less concern since the ASR well is periodically pumped as part of the normal operation.

b) In determining whether to design a disposal system or ASR system, many predesign criteria should be evaluated. These generally include, as a minimum, the following criteria:

(1) Analysis of reclaimed water supply and demand projections, identifying potential reuse customers

(2) Characterization of reclaimed water quality and native formation water quality

(3) Assessment of existing groundwater users in the area

(4) Compatibility of and recovery efficiency of reclaimed water stored for reuse applications

(5) Identification of suitable storage or disposal hydrogeologic sequences

6() Permitting considerations to determine which program meets the environmental objectives and standards set for the area

Section 10: SOLIDS CONVEYANCE AND SOLIDS PRETREATMENT

10.1 Introduction. Topics involved with solids handling and disposal include characterization of the solids, pumping, piping, pretreatment, conditioning, thickening, stabilization, dewatering, storage, transport, and disposal. The WEF design guidance set provides design information on all of these aspects of solids handling and disposal. However, supplementary design information was considered necessary for piping, pump selection and design, and pretreatment (which includes grinding, screening, degritting, blending, and storage). These topics are covered in this section.

10.2 Data Requirements for Design of Solids Conveyance and Pretreatment Systems. The following data are typically required for designing solids conveyance and pretreatment systems:

a) Solids production maximum, average, and minimum rates and associated solids concentration ranges

b) Characteristics of the solids with respect to grit, abrasive materials, rags, plastics, and stringy material content

10.3 Piping Design

10.3.1 Pipe Sizing. To minimize plugging problems, gravity solids withdrawal lines should not be less than 8 inches (200 mm) in diameter. Pressurized piping should be designed to provide average flow velocities between 3 and 8 fps (0.9 and 2.4 m/s) but should be no smaller than 4 inches (100 mm) in diameter to minimize plugging. Some state regulations may require a minimum of 6-inch (150-mm) diameter pipe (refer to Great Lakes-Upper Mississippi River Board of State Public Health and Environmental Managers, 1990). Note that for installations using positive displacement pumps and producing pulsating flow rates, velocities during the discharge stroke may range up to 15 fps (4.6 m/s).

10.3.2 Material Selection. Glass-lined ductile iron pipe is the material of choice for pressurized pipe used for conveying primary solids or scum. It is able to withstand high pressures and is much smoother than unlined pipe. The glass is also more resistant than plastic to abrasive material. Teflon-type coatings may also be considered. In addition, plastic-lined steel, iron, or Schedule 80 CPVC pipe can be used. For

return/waste activated sludge and digested solids, cement-lined ductile iron pipe is recommended.

10.3.3 Head Loss Determination. At concentrations above about 1.5 percent solids, wastewater solids streams act as non-Newtonian fluids. As a result, head losses encountered in the pumping of thick solids are greater than those for water under similar conditions. Head losses increase with increased solids content, increased volatile content, and lower temperatures. Higher pressures are also required to overcome resistance and start flow, especially after the discharge piping has been shut down for several hours or more. In primary solids systems, grease coatings that reduce the effective diameter of the pipeline may also cause heads greatly in excess of the theoretical head. As a result of these factors, head losses should be determined with great care. Guidelines for head loss calculations are provided in WEF MOP 8.

10.3.4 System Layout. Make provisions for cleaning suction and discharge piping (normally by pigging). Pigs operate best at 3 to 5 fps (0.9 to 1.5 m/s) and require pressures higher than those supplied by most solids pumps. A flushing connection should be provided on suction lines and, in some cases, on discharge lines. Use of plant effluent for flushing water at a flow rate of 160 gallons/minute (10 L/s) and a pressure of at least 70 psi (483 kPa) has been recommended (refer to Metcalf & Eddy,1991). Hot water is preferable for flushing where grease buildup has occurred.

Use long sweep elbows or 45-degree bends rather than 90-degree elbows wherever possible. Because erosion of elbows is likely, locate them where replacement will not be too difficult.

10.4 Pump Selection. This paragraph introduces pump types and guides the designer in pump selection. Par. 10.5 details the design of pumping systems. Additional information pertinent to designers can be found in WEF MOP 8.

Pumps used to convey wastewater solids and scum include the centrifugal, plunger, progressing cavity, and diaphragm types. Pump selection from among these types depends on the type of solids to be pumped. Refer to Table 17.

Descriptions of these pumps are provided in the following two publications: Metcalf & Eddy, 1991, and

EPA 625/1/79/001. The relative advantages and disadvantages of each pump type are presented below.

Table 17
Pump Selection

Type of Solids	Applicable Pump
Raw or digested primary solids	Centrifugal pump (torque-flow or screw feed type) Plunger pump Progressing cavity pump Diaphragm pump (air operated)
Trickling filter biosolids	Centrifugal pump (torque-flow or nonclog type) Plunger pump Progressing cavity pump
Raw or digested waste activated sludge	Centrifugal pump (nonclog type)
Thickened waste activated sludge	Progressing cavity pump
Scum	Progressing cavity pump Centrifugal pump (cutter or torque-flow type) Peristaltic (hose) pump Rotary lobe pump Diaphragm pump Plunger pump

10.4.1 Centrifugal Pumps. Standard centrifugal pumps are generally not suitable for pumping solids streams because the impellers are prone to clogging. In the torque-flow centrifugal pump design, the impeller is recessed and imparts a vortex into the fluid, which propels the flow without the impeller directly contacting the solids stream. As a result, the pump is able to pass solids as large as the suction and discharge piping, although an upstream grinder is still recommended. Abrasive wear is also not a significant problem with torque-flow pumps. Torque-flow pumps are relatively inefficient, but they are

recommended for primary solids pumping applications where the sludge is relatively thin (2 percent solids or less).

The screw feed centrifugal pump incorporates some of the features of the torque-flow design but also has an auger-shaped portion of the impeller that extends into the volute. This feature results in higher pumping efficiency and a steeper head curve than the conventional torque-flow design, which helps in flow control. However, this type of centrifugal pump is more likely to accumulate stringy material if the solids stream is not ground properly beforehand.

Centrifugal cutter pumps, or grinder pumps, overcome clogging problems by incorporating a sharp cutting edge on the impeller, which serves to grind the solids passing through. The main disadvantage of the cutter pump and the other types of centrifugal pumps is that they cannot generate the high heads that a positive displacement pump can.

10.4.2 Progressing Cavity Pumps. Progressing cavity pumps produce a relatively even flow and can achieve high pressures, which permit longer pumping distances than centrifugal pumps and aids in flushing of plugged lines. Two-stage progressing cavity pumps can generate from 120 to 150 psi (827 to 1,034 kPa) of pressure; higher pressures can be achieved, if necessary, by using more stages. Up to nine stages are available, although using one to four is most common.

Rapid wear of the rotor and stator from abrasive grit is one of the primary drawbacks to using progressing cavity pumps for primary solids. However, rapid wear is less of a problem with thickened activated sludge pumping or scum pumping. For concentrated primary scum, progressing cavity pumps are the only type of pumps recommended.

Progressing cavity pumps require a dry pit installation. The pumps are self-priming at suction lifts up to 28 feet (8.5 m). Run-dry protection, such as a high-temperature sensor in the stator, is recommended. A grinder ahead of the pump is also recommended.

10.4.2.1 Capacity and Power Considerations. Whenever progressing cavity pumps are used for pumping primary solids (raw or digested), a generous allowance should be made in capacity. The pump should be designed to pump at least 50 percent more than its required peak hydraulic capacity, and speed control should be

provided to allow operation over the entire flow range (minimum flow with new stators and rotors; maximum flow with worn stators and rotors). Determine the motor horsepower based on worst-case hydraulics, not including the added 50 percent capacity allowance. Also, the minimum horsepower necessary to start the pump must be provided. Proper selection of the pump speed range is essential. The average operating speed should be in the range of 40 to 80 rpm and should never exceed 200 rpm.

10.4.3 Plunger Pumps. A plunger pump, also called a piston pump, is a positive displacement pump in which a reciprocating piston displaces its volume on each stroke. This pump has the capability to self-prime to low suction lifts of up to 10 feet (3 m), although it is recommended that these pumps be used under flooded suction conditions to avoid priming problems. Suction and discharge ball check valves are provided to prevent backflow during operation. To reduce surge in lines, air chambers should be provided on all discharge pipes and on suction pipes with more than 5 feet (1.5 m) of suction head.

One disadvantage of plunger pumps is their frequently messy operation. Oil must be added every shift, and it usually leaks around the pump area. Packing glands on the plunger usually leak, so it is recommended that an easy means of containing the spills and cleaning the pump area be included in the system design.

10.4.3.1 Pulse Flow/Capacity Considerations. Plunger pumps are relatively limited in capacity (75 to 250 gpm [4.7 to 16 L/s]). The discharge is varied by manually adjusting the stroke length. Stroke frequency is usually controlled by a timer. The system must be designed for the pump’s pulse flow, not its rated capacity, as listed below:

Type of Pump	Pulse Flow/Rated Capacity
Simplex	3.10
Duplex or two simplex	1.55
Triplex or three simplex	1.20
Two duplex	1.10

As indicated, duplex and triplex pumps give a smoother flow than simplex pumps, which reduces horsepower requirements. Because of their pulsating flow, direct flow measurement can be difficult. Analog devices that produce a signal proportional to

flow whenever the pump operates are often used. These must be manually adjusted whenever the pump stroke length is changed.

10.4.4 Diaphragm Pump. A diaphragm pump is a positive displacement pump that delivers a volume equal to the displacement of the driving element, a flexible diaphragm, on each stroke. While several types of diaphragm pumps are available, only the air-operated type with spring assist is recommended for pumping primary solids. This type of pump is suited to pumping thick solids (above 2 percent) but is not recommended for pumping primary scum.

The air-operated diaphragm pump requires very clean, high-pressure (80 to 124 psi [552 to 855 kPa]), low humidity (-40°F [-40°C] dew point) air for operation. The air should be delivered through a 1-1/4- to 1-1/2-inch (3 to 4 cm) minimum supply tap. A timer-operated solenoid valve allows air to rapidly enter and exit the pump operating chamber, which in turn rapidly flexes the diaphragm. This results in high flow velocities in both the suction and discharge piping, minimizing pipe clogging problems but causing substantial surges that require special consideration during design. For example, a 4-inch (10 cm) pump delivers a 3.8-gallon (14-L) stroke, which is equivalent to about 250 gpm (16 L/s).

Because of the large forces on the pipeline, the design must include adequate pipe restraints and flexible couplings between the pump and piping. Air surge chambers and double ball checks should be provided on both the suction and discharge sides to protect the piping. A muffler is required on the air discharge.

10.4.5 Rotary Lobe Pump. Rotary lobe pumps use synchronized cams inside a chamber. Voids between the cams and the chamber fill with the material being pumped and force it from the suction side to the discharge side. Because of the close tolerance and lack of natural flushing between the lobes and the chamber housing, there have been extensive problems in the past with excessive wear when pumping abrasive materials. As a result, these pumps may be applicable for scum pumping but not for pumping of other wastewater solids streams.

10.5 Pumping System Design. Arrange pumps so that they can be easily serviced, with adequate space and lighting. The floor where the pumps are located should generally be sloped 1/4 to

1/2 inch per foot (2 to 4 cm/m) to facilitate drainage and cleanup. For pumps too large to be lifted manually, a chain hoist attachment, monorail, or traveling bridge crane sized to handle the largest piece of equipment should be provided. Hatches, doors, or removable walls should be provided where appropriate to allow removal of equipment.

For primary solids pumping systems, provide surge chambers with pressure gauges and flexible pump-to-piping couplings on both the suction and discharge side of the pump. A high-discharge pressure alarm and high-pressure shutdown system should be provided. Seal water, where required, should be potable water or filtered final effluent. Backflow preventers are required if potable water is used.

Requirements concerning pump capacity, need for duplicate units, minimum head, and sampling valves are given in Ten State Standards (Great Lakes, 1990).

10.6 Solids Grinding. In-line solids grinders, which cut large materials into small particles, are recommended upstream of progressing cavity pumps and centrifuges to prevent clogging. They are also beneficial upstream of belt filter presses to help reduce belt damage and wear. Several manufacturers market grinders, which have different maintenance requirements and produce varying degrees of pulverized solids. Descriptions of solids grinders and design information are provided in WEF MOP 8.

10.7 Solids Screening. Solids screening may be necessary to ensure a uniform and visually acceptable product, to assist in the operation of mechanical dewatering units, or to prevent accumulation of rags and plastics in digesters. Solids screening is more effective than grinding but also more costly and maintenance-intensive. The solids screenings volume is estimated at 10 to 75 cubic yards per day per million gallons (2 to 15 cubic meters per day per million liters) of plant influent.

Internal feed rotary screens are the recommended choice for solids screening because of the cross-flow feed pattern, which minimizes aligning of fibers with the openings and reduces plugging problems. Static screens are not recommended for this application because of clogging problems.

Screens should be sized to handle the maximum projected solids stream flow, considering equalization available in the

system and the number of hours per day scheduled for solids wasting. Because of the effect of suspended solids on the screen, the hydraulic capacity when screening primary solids is estimated to be only about 10 percent of the hydraulic capacity when screening raw wastewater. Typical screen opening size varies between 0.1 and 0.25 inches (0.25 and 0.6 cm). Openings below 0.1 inch (0.25 cm) will tend to bind with grease. The presence of grease and scum make it essential that the screen contain a positive cleaning mechanism. Fine screens typically require a high-pressure (1,400 psi [9,653 kPa]) hot water or steam wash at least once per day.

10.8 Solids Degritting. In small plants, separate grit-removal facilities are frequently not provided at the head of the plant, so grit settles in the primary clarifiers. In this case, the primary solids are often degritted to protect downstream processes such as pumps and digesters. Grit carryover to secondary settling basins is generally not a problem that warrants grit removal from secondary solids.

The use of hydrocyclones is the most practical method of degritting solids. The solids stream is applied tangentially to the cylindrical portion of the unit, which imparts a centrifugal force. The heavier grit particles move to the outside of the cylinder section and are discharged through a conical section, while the organic solids stream is discharged through a separate outlet. The efficiency of grit removal is a function of the solids concentration of the influent solids. Solids should be pumped to the hydrocyclone at no more than 1 percent solids concentration for effective grit removal.

10.9 Solids Blending. In small treatment plants of about 1 mgd [4 ML/d] or less, secondary waste activated sludge is commonly wasted to the primary settling tanks, where it settles and mixes with primary solids. If digestion is provided at the plant, primary and secondary solids can also be fed separately to the digester because the detention time in a digester is long enough that a uniform feed mixture of primary and secondary solids concentration is not required for process stability.

If a uniform blend of primary and secondary solids is required upstream of a stabilization or dewatering process, a separate solids blending tank should be provided. The detention time of the tank will vary from a few hours to a few days,

depending on storage rather than blending requirements. Provide mechanical mixing to ensure complete blending of the solids.

Because solids will go septic rapidly, the blend tank should be aerated or provided with chlorine or hydrogen peroxide feed to control odors. Covering tanks when the contents are anaerobic may lead to severe sulfide-induced corrosion above the liquid surface unless adequate ventilation is provided.

10.10 Storage. The rates of solids production and processing at a wastewater treatment plant vary independently with time. The rates of primary and secondary solids production vary with the plant influent suspended solids and organic loadings, whereas the rate of solids processing varies with the nature and capacity of the processing and disposal system and the manner in which the system is operated. In general, solids production is continuous, while certain portions of the processing system are discontinuous, e.g., 8 to 16 hours per day, 5 days per week. Likewise, sometimes solids cannot be disposed during inclement weather or during certain seasons of the year.

Consequently, solids storage capacity is mandated at all mechanical wastewater treatment plants. Temporary storage can be provided within settling basins. Longer-term storage can be provided within digesters, separate blend/storage tanks, or lagoons. If the solids have been stabilized and dewatered, stockpiling on a pad may be acceptable. In humid climates, dewatered cake stockpile areas should generally be covered. The required solids storage volume should be calculated. Methods of calculation are described in Metcalf & Eddy, 1991, and in MOP 8.

Section 11: LABORATORY FACILITIES AND SAMPLE COLLECTION SYSTEM DESIGN

11.1 Design of Laboratory Facilities and Sample Collection Systems. This section addresses two interrelated design concerns: laboratory facilities and sample collection systems. An efficient laboratory design takes into account the analyses normally performed at an installation as part of its operation. Similarly, a good sample collection system is part of overall plant design and process control. The primary design guidance, WEF MOP 8, provides some coverage of laboratory facilities planning and sample collection system requirements in Chapter 4, Site Selection and Plant Layout. The paragraphs below address these two topics and provide titles for additional references.

11.2 Laboratory Facilities Planning. The traditional approach to designing wastewater laboratories often relies on simple formulas, usually based on treatment plant capacity, to size and furnish laboratory facilities. While these formulas may provide acceptable laboratory space for relatively small treatment plants, too often the result is a cramped, inadequately designed laboratory lacking many essentials. Good laboratory design ultimately depends on a knowledge of the type and quantity of analytical tests to be performed. Usually, a number of different analysis or tests are required for each installation. These tests, along with the number of samples to be analyzed for each test parameter, determine the number of people involved and the equipment and conditions required. This information, in turn, establishes the basic limitations on size and arrangement of the laboratory facilities.

11.2.1 Design Guidance. Comprehensive guidelines of sufficient scope and depth for the design of wastewater laboratories are provided in Laboratory Planning for Water and Wastewater Analysis, Douglas Clark, 1988. That handbook considers the influence of each of the several related factors necessary for an effective design. It also provides a step-by-step guide for the laboratory designer in the following areas:

a) Kinds and quantities of laboratory analyses normally performed by various installations.

b) Number of laboratory personnel required to accomplish the above analyses.

c) Size of laboratory facility needed to adequately house the laboratory personnel and equipment required to perform testing at a specific location.

d) Design and construction details, including layout or floor plan, internal dimensions, and materials of construction.

e) Installed furnishings, including casework, bench tops, balance and instrument tables, sinks and drains, fume hoods, and emergency showers and eyewashes.

f) Services including HVAC, lighting, electric power, water, gas, vacuum, and compressed air.

g) Laboratory equipment, chemicals, and supplies required to carry out the analytical workload at a specific laboratory facility. These requirements are typically driven more by the type of treatment facility and level of treatment to be achieved (for example advanced waste treatment versus secondary treatment) than by the treatment facility size.

h) Example design applications.

11.3 Sample Collection Systems. The importance of reliable and frequent laboratory tests cannot be overemphasized. Effective treatment plant design and process control are based, for the most part, on accurate wastewater characterizations. Reliable test data, in turn, depend on samples that are fully representative. In other words, the samples must truly reflect the actual condition of the wastewater. Designers of sample collection systems should consider 1) the location of sample points, 2) types of samples, and 3) sample collection methods. These three areas are discussed below. For additional information, refer to EPA-600/4-82-029, Handbook for Sampling and Sample Preservation of Water and Wastewater.

11.4 Sampling Locations. Sample locations are normally defined by regulatory requirements and operational objectives. For example, operating permits for wastewater treatment plants usually require sampling of both influent and effluent. Additional sample locations may be required based on the type and number of processes to be monitored as well as the configuration of the treatment facility. For instance, proper operation of the activated sludge process requires more monitoring than trickling

filters or stabilization ponds. Also, some treatment facilities have multiple treatment units, bypass and recycle streams, and other features that need to be considered when designing a sampling system.

11.4.1 Selecting Sample Locations. Consider the following five points when selecting locations for sample collection: homogeneity, wastewater characteristics, water quality degradation, flow measurement, and convenience. Each factor is discussed below.

11.4.1.1 Homogeneity. Take samples from waters that are well mixed. Areas of high turbulence and hydraulic jumps are usually good sample sites. Take samples in the center of channels, where velocity is highest and the possibility for solids settling out is lowest. Avoid locations immediately upstream of weirs, where solids tend to settle. Also avoid locations of different densities and locations where oils and floatable matter tend to collect.

Sample taps on pipes should be placed on the side of the pipe in a horizontal run following a 90-degree bend, tee, or valve that will produce turbulence and mixing. Avoid placing sample taps on the bottom of any pipe or at the top of large-diameter pipes that may not always be full. For large-diameter pipes (greater than 18 inches [450 mm]) and all tanks, the sample tap should extend toward the center of the pipe or tank, where the samples tend to be more representative.

11.4.1.2 General Characteristics of the Wastewater. Collect samples at representative sites in the individual wastestream. For example, plant influent samples should be taken upstream of the confluence with recycle flows. Effluent sampling locations will be specified in the permit.

11.4.1.3 Water Quality Degradation. Consider the need for sample preservation. For example, refrigerated composite samplers must have a reliable power source. Power failure should trigger an alarm to alert operators.

11.4.1.4 Flow Measurement. Most sample sites, including all influent and effluent locations, should be located where flows are known or can be easily determined.

11.4.1.5 Convenience. Accessibility and practicability are important but secondary to the preceding considerations.

11.5 Type of Sample. The type of sample collected depends on the variability of flow, the variability of water quality, specific handling and storage requirements of the designated laboratory analysis, and the accuracy required. For compliance monitoring, a specific sample type is typically specified in the operating permit. In general, two types of samples are taken for laboratory analysis, grab samples and composite samples.

11.5.1 Grab Sample. A grab sample is defined as an individual, discrete sample collected over a period of time not exceeding 15 minutes. The single sample is taken at neither a set time nor flow and represents conditions or characteristics only at a particular point in time. Grab samples can be taken manually or with the aid of a suitable mechanical device, such as a pump or vacuum.

11.5.2 Composite Sample. A composite sample is defined as a sample formed by mixing discrete samples taken at periodic points in time or by collecting a continuous proportion of the flow. The number of discrete samples which make up the composite depends upon the variability of the wastewater quality as well as variability of flow. A sequential composite is defined as a series of periodic grab samples, each of which is held in an individual container, then composited to cover a longer time period. Six methods are used for compositing samples. Table 18 lists those methods with their advantages and disadvantages. The choice of composite type is dependent on the relative advantages and disadvantages as they apply to local conditions.

11.5.3 Selection of Sample Type.

11.5.3.1 Grab Samples. Use grab samples in the following instances:

a) When using samples such as batch dumps (i.e. return-activated sludge [RAS], waste-activated sludge [WAS], or digestor supernatant, etc.), the process stream does not flow continuously.

b) The water characteristics are relatively constant.

c) The parameters to be analyzed are likely to change with storage, such as dissolved gases (i.e., DO, residual chlorine, soluble sulfides, oil and grease, microbiological parameters [coliforms], some organic constituents, and pH).

d) It is desired to corroborate composite samples.

Table 18
Compositing Methods

Sample Mode	Compositing Principle	Advantages	Disadvantages	Comments
Continuous	Constant pumping rate	Minimal manual effort; requires no flow measurement	Requires large sample capacity; may not be representative for highly variable flows.	Practical but not widely used
Continuous	Sample pumping rate proportional to stream flow	Most representative especially for highly variable flows; minimal manual effort	Requires accurate flow measurement equipment, large sample volume, variable pumping capacity, and power.	Not widely used
Periodic	Constant sample volume; constant time interval between samples	Minimal instrumentation and manual effort; requires no flow measurement	May not be representative, especially for highly variable flows.	Widely used in both automatic samplers and manual sampling
Periodic	Constant sample volume; time interval between samples proportional to stream flow	Minimal manual effort	Requires accurate flow measurement/ reading equipment. Manual compositing from flowchart.	Widely used in automatic as well as manual sampling
Periodic	Constant time interval between samples; sample volume proportional to total stream flow at time of sampling	Minimal instrumentation	Manual compositing from flow chart; in absence of prior information on the ratio of minimum to maximum flow, there is a chance of collecting either too small or too large individual discrete samples for a given composite volume.	Used in automatic samplers and widely used as manual method
Periodic	Constant time interval between samples; sample volume proportional to total stream flow since last sample	Minimal instrumentation	Manual compositing from flow chart. In absence of prior information on the ratio of minimum to maximum flow, there is a chance of collecting either too small or too large individual discrete samples for a given composite volume.	Not widely used in automatic samplers but may be done manually

Table 18 (Continued)
Compositing Methods

Sample Mode	Compositing Principle	Advantages	Disadvantages	Comments
Periodic	Constant time interval between samples; sample volume proportional to total stream flow at time of sample	Minimal instrumentation	Manual compositing from flow chart. In absence of prior information on the ratio of minimum to maximum flow, there is a chance of collecting either too small or too large individual discrete samples for a given composite volume.	Used in automatic samplers and widely used as manual method

e) Grab samples are necessary to meet permit requirements.

f) Information on maximum, minimum or variability is desired.

11.5.3.2 Composite Samples. Use composite samples when:

a) Determining average concentrations

b) Calculating mass per unit time loading

11.6 Methods of Sample Collection. Samples can be collected manually or with automatic samplers. Whichever technique is adopted, the quality of laboratory data is a function of the care exercised in sample collection. Optimum performance will be obtained by using trained personnel.

11.6.1 Manual Sampling. There is minimal initial cost involved in manual sampling and a certain amount of manual sampling is unavoidable. But the technique can become costly and time consuming for collection of routine composite samples. Table 19 lists some of the advantages and disadvantages of manual and automatic sampling.

11.6.2 Automatic Samplers. Automatic samplers are used because of their cost effectiveness, reliability, and improved capabilities (i.e., they permit greater sampling frequency). In some cases, the increased sampling requirements of NPDES and other regulatory permit programs virtually mandate automatic samplers. Automatic samplers are available with widely varying levels of sophistication, performance, mechanical reliability, and cost. No single automatic sampling device is ideally suited for all situations. For each application, the following variables should be considered in selecting an automatic sampler:

a) Variation of wastewater characteristics with time

b) Variation of flow rate with time

c) Specific gravity of liquid and concentrations of suspended solids

d) Presence of floating materials

Table 19
Advantages and Disadvantages of Manual and Automatic Sampling

Type	Advantages	Disadvantages
Manual	Low capital cost	Probability of increased variability due to sample handling
	Compensate for various situations	Inconsistency in collection
	Note unusual conditions	Inefficient use of labor
	No maintenance	Repetitious and monotonous task for personnel
	Can collect extra samples in short time when necessary	
Automatic	Consistent samples	Considerable maintenance for batteries and cleaning; susceptible to plugging by solids
	Probability of decreased variability caused by sample handling	Restricted in size to the general specifications

Table 19 (Continued)
Advantages and Disadvantages of Manual and Automatic Sampling

Type	Advantages	Disadvantages
	Minimal labor requirement for sampling Has capability to collect multiple bottle samples for visual estimate of variability and analysis of individual bottles	Inflexibility Sample contamination potential Subject to damage by vandals

There are usually five interrelated subsystems in the design of an automatic sampler. These subsystems and the criteria for selecting them are described briefly below.

11.6.2.1 Sample Intake Subsystem. The success of an automatic sampler in gathering a representative sample depends on sampling site conditions and the design of the sample intake subsystem. The reliability of a sample intake subsystem is measured in terms of the following factors:

a) Freedom from plugging or clogging

b) Nonvulnerability to physical damage

c) Minimum obstruction to flow

d) Capability to draw a representative sample

e) Multiple intakes

f) Rigid intake tubing or facility to secure or anchor the intake tubing; avoidance of sharp bends, twists, or kinks to prevent clogging of intake line

g) Compatible materials

11.6.2.2 Sample Gathering Subsystem. Three basic sample gathering methods are available in commercial samplers: mechanical, forced flow, and suction lift. Figures 25 and 26 illustrate forced flow and suction lift sample gathering subsystems, respectively. Figure 27 illustrates an open channel mechanical sample gathering subsystem that can be used for both weir and flume installations. These subsystems are compared in Table 20.

11.6.2.3 Sample Transport System. A majority of commercially available composite samplers have fairly small diameter tubing in the sample train. This tubing is vulnerable to plugging because of the buildup of fats, other solids, and insoluble components. Adequate flow rates must be maintained throughout the sampling train to effectively transport suspended solids.

To optimize sampler performance and reliability, the following features are desirable:

a) Use a sample transport line with at least a 1/4-inch (6-mm) internal diameter.

b) For most applications, replaceable sample lines are preferable.

c) For most applications, select samplers that minimize contact of the water/wastewater with metal surfaces during sample transport.

d) For peristaltic pumps, use a sample line that is transparent and flexible, and made of an inert material such as Tygon. For collection of organics, use sample lines constructed of silicone rubber. Do not use silicone rubber transport lines for trace metal sampling since zinc may be a contaminant.

e) Conduct tests on sample transport lines and containers to ensure that the sample is not contaminated.

f) Prevent clogging of sample lines by avoiding sharp bends, twists, or kinks.

g) Flush the sample line prior to and immediately after each sample collection. A clean water flush is effective but not feasible in most instances. A complete air purge is sufficient for non-permanent or winter operation.

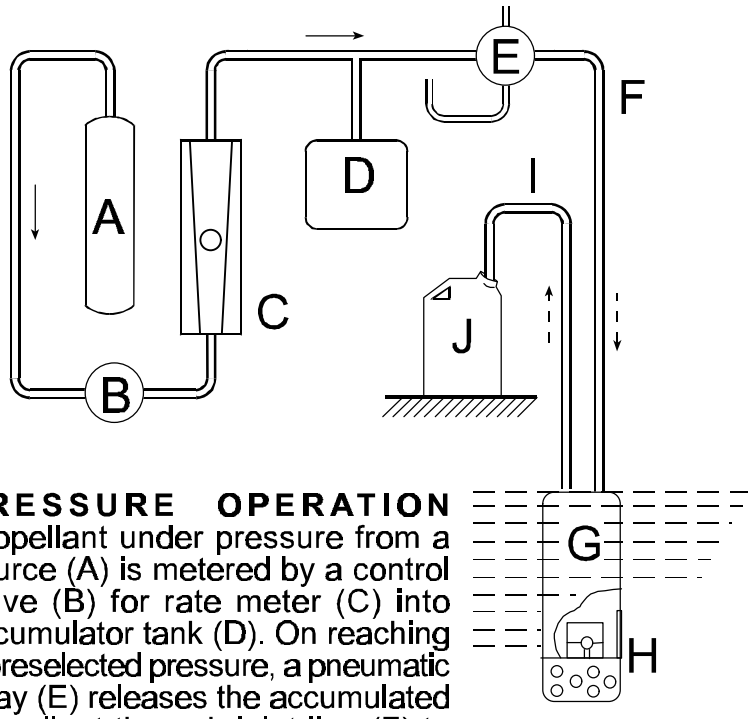

PRESSURE OPERATION
Propellant under pressure from a source (A) is metered by a control valve (B) for rate meter (C) into accumulator tank (D). On reaching a preselected pressure, a pneumatic relay (E) releases the accumulated propellant through inlet line (F) to the sample intake chamber (G). Pressure in the chamber closes its check valve (H) and propels the sample through outlet line (I) and into the sample bottle (J). Excess propellant vents through the sample line, thereby purging it of liquid and incidentally providing protection against line freezing in cold weather. The resulting pressure drop recloses the relay (E) and the sampling cycle repeats at a repetition rate determined by adjusting the control valve (B).

Figure 25
Schematic of Forced Flow Type Sampler

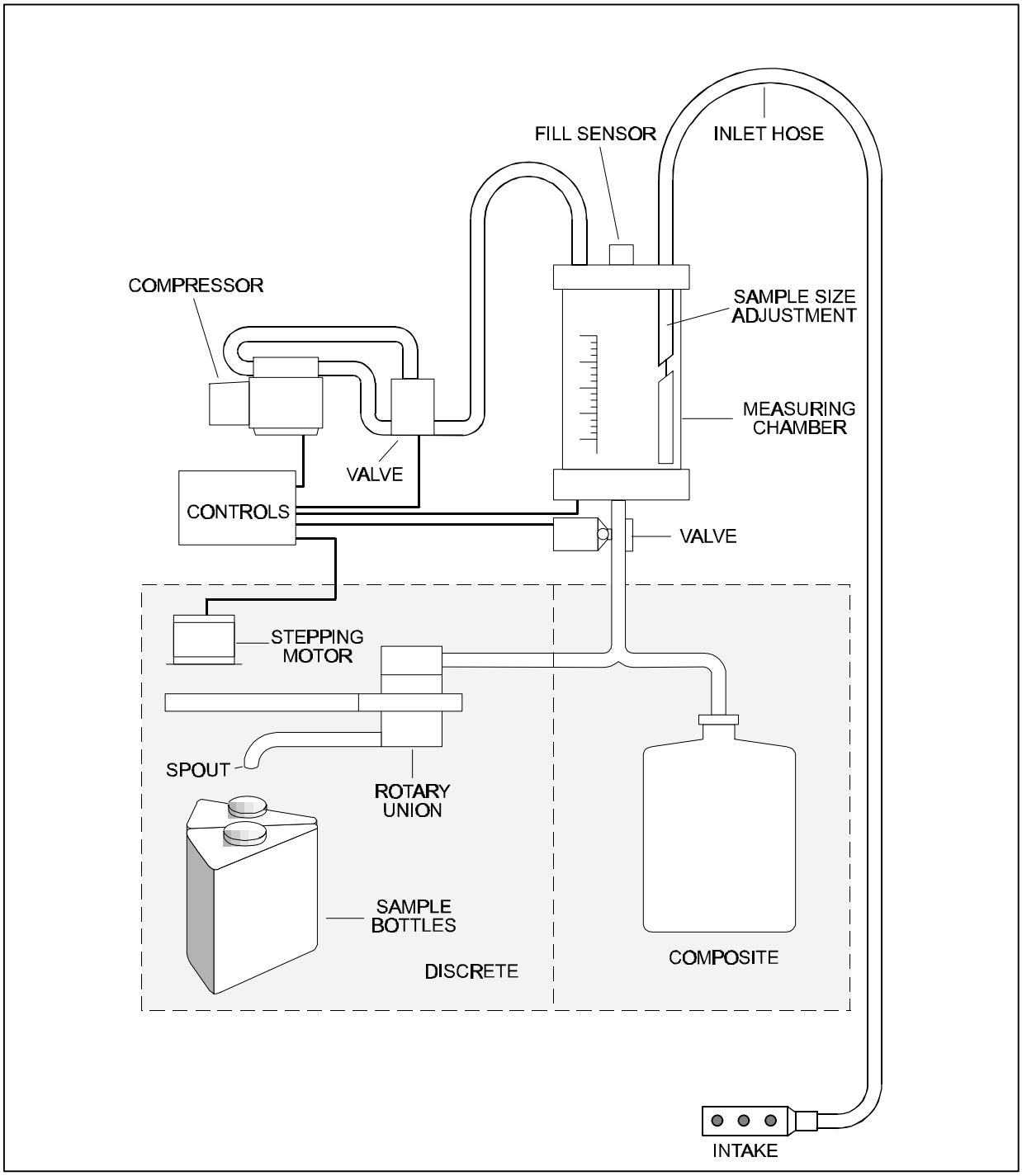

Figure 26
Schematic of Suction Lift Type Sampler

Parts List

No.	Description
1.	Motor–Reducer
2.	Drive Sprocket
3.	Driven Sprocket
4.	Roller Chain
5.	Scoop
6.	Scoop Counter Weight (not shown)
7.	Limit Switch
8.	Time Clock
9.	Alum. Sampler Casting
10.	Alum. Sampler Support
11.	Outlet Coupling
12.	Unilet Body and Cover

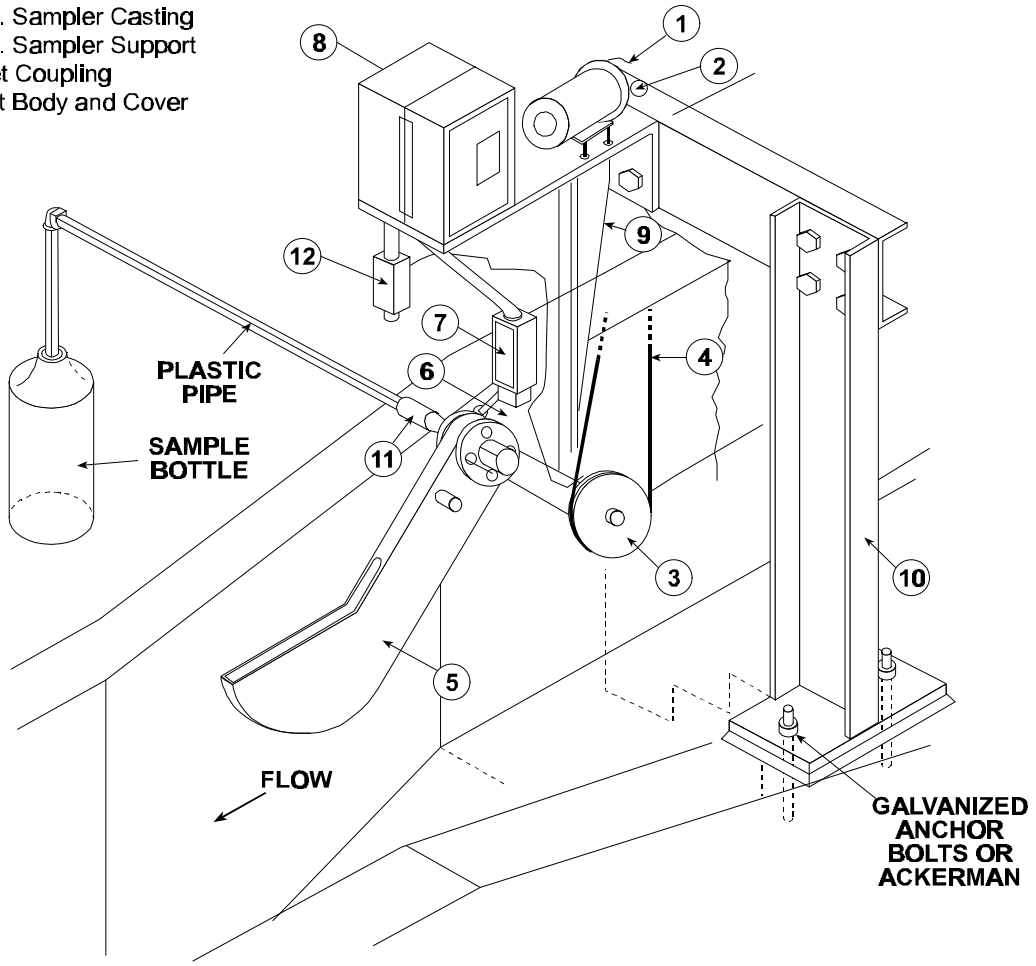

Figure 27
Schematic of Open Channel Mechanical Sampler

Table 20
Comparison of Sample Gathering Subsystems

Feature	Mechanical	Forced Flow	Suction Lift
Allowable lift height to sample container	High	High	Limited to 25 feet (7.6 m) or less
Sample integration over the entire depth	Possible	Possible with pumps but not with ejection units	Possible with multiple intakes
Obstruction to flow	Significant	Less than mechanical subsystem	Very little
Explosion proof	Some	Pneumatic ejection units meet this requirement	Some
Dissolved gasses	No problem	No problem	Not suited, but if used the initial flow should be discarded
Fouling	Exposed parts have a tendency to foul	Not easily fouled	Intake tubing of less than 1/4 inch (6 mm) inside diameter is prone to fouling
Sample volume	Suitable for wide range	Pump suitable for wide range; pneumatic ejection units suitable for sample volume	Should be independent of vertical lift
Flexibility	Limited	Moderate	Maximum
Maintenance	Heavy	Moderate but costly	Little

h) Select a sample pump capable of lifting a sample a vertical distance of 20 feet (6.1 m) and maintaining a line velocity of 2 to 10 fps (0.6 to 3.0 m/s).

i) The importance of line velocity and isokinetic conditions (intake velocity same as velocity of flow of water) depends on the concentration and density of the filterable suspended solids in the water, the sampling program requirements for accuracy of suspended solids determinations, and any other parameters affected by suspended solids concentrations. If a sampling program requires maintaining isokinetic conditions, dial adjustment of intake velocity is a desired feature.

j) All materials should be examined to ensure that they do not contaminate the sample.

k) Exclude light from the sample storage compartment.

11.6.2.4 Sample Storage Subsystem. Discrete samples are subject to considerably more error introduced through sample handling; however, they provide opportunity for manual flow compositing and time history characterization of a wastestream during short period studies. The desired features of sample storage subsystems include the following:

a) Flexibility of discrete sample collection with provision for single composite container

b) Minimum discrete sample container volume of 0.13 gallons (500 milliter [mL]) and a minimum composite container capacity of 2.0 gallons (7.57 L)

c) Storage capacity of at least 24 discrete samples

d) Containers of conventional polyethylene or borosilicate glass and of wide-mouth construction

e) Capability for cooling samples by refrigeration or a space for packing ice and maintaining samples at 39° to 43°F (4° to 6°C) for a period of 24 hours at an ambient temperature range between -22° to 122°F (-30° to 50°C)

f) Adequate insulation for the sampler to be used in either warm or freezing ambient conditions

11.6.2.5 Controls and Power Subsystem. The following are desired power and control features that may be necessary depending upon whether the sampler is to be a portable or permanent installation:

a) Capability for either alternating current (AC) (electrically grounded system) or direct current (DC) operation.

b) Battery life for 2 to 3 days of reliable hourly sampling without recharging.

c) Battery weight of less than 20 pounds (9 kg). Batteries should be sealed so no leakage occurs.

d) Solid-state logic and printed circuit boards.

e) Timing and control systems contained in a waterproof compartment and protected from humidity. Timer should use solid-state logic and a crystal controlled oscillator.

f) Controls directly linked to a flowmeter to allow both flow-proportional sampling and periodic sampling at an adjustable interval from 10 minutes to 4 hours.

g) Capability of multiplexing, that is, drawing more than one sample into a discrete sample bottle to allow a small composite over a short interval. Also capability for filling more than one bottle with the same aliquot for addition of different preservatives.

h) Capability of adjusting sample size and ease in doing so.

11.6.2.6 General Desirable Features. For safety, maintenance, reliability, and security in field applications, the following general features are desired in an automatic sampler:

a) Water-tight casing to withstand total immersion and high humidity

b) Vandal-proof casing with provisions for locking

c) A secure harness or mounting device if sampler is placed in a sewer

d) Explosion-proof construction

e) Sized to fit in a standard manhole without disassembly

f) Compact and portable for one-man installation

g) Overall construction, including casing, of materials resistant to corrosion (plastics, fiberglass, stainless steel)

h) Exterior surface painted a light color to reflect sunlight

i) Low cost, availability of spare parts, warranty, ease of maintenance, reliability, and ruggedness of construction

11.6.3 Installation and Use

11.6.3.1 General Consideration. Sampling equipment will yield good results only when properly installed and maintained. A few general guidelines follow:

a) When a sampler is installed in a manhole, secure it either in the manhole (e.g., to a rung above the high water line) or outside the manhole to an aboveground stake by means of a rope.

b) Place the intake tubing vertically or at such a slope to ensure gravity drainage of the tubing between samples, avoiding loops or dips in the line.

c) Position the intake in the stream facing upstream. Limit the orientation of the intake 20 degrees on either side of the head-on. Secure the intake so that no drag is placed on the inlet tubing.

d) After the installation is complete, collect a trial sample to ensure proper operation and sample collection. The sampler must give replicate samples of equal volume throughout the flow range. If the sampler imposes a reduced pressure on a wastestream containing suspended solids, run the first part of the sample to waste.

11.6.3.2 Winter Operation. For outdoor use in freezing temperatures, use special precautions to prevent the collected sample(s) from freezing:

a) Place the sampler below the freezing level or in an insulated box.

b) When AC is available, use a light bulb or heating tape to warm the sampler. When installation below the freezing level is not possible and line current is available, wrap 4 to 6 feet (1.2 to 1.8 m) heat tapes (thermostatically protected 38°F [3°C]) around the sample bottle and the intake lines. Loosely wrap a large 10-mil plastic trash bag over the heat tape on the intake lines. Place a large plastic bag over the sampler as loosely as possible.

c) Place the line vertically or at such a slope to ensure gravity drainage back to the source. Even with a back-purge system, some liquid will remain in the line unless gravity drainage is provided. If an excess length of tubing exists, cut it off. Keep all lines as short as possible.

d) Do not use catalytic burners to prevent freezing since vapors can affect sample composition. When power is unavailable, use a well-insulated box containing the sampler, a battery, and a small light bulb to prevent freezing.

11.6.4 Selection of an Automatic Sampler. To choose an automatic sampler, list the desired features needed and select the sampler that best fits the requirements consistent with the sampling objectives. Following is a list of features to be considered in selecting an automatic sampler:

a) Vertical lift

b) Submergence

c) Explosion proof

d) Intake tube: diameter/material

e) Dissolved gases

f) Suspended solids

g) Oils and grease and floating material

h) Materials: organic pollutants

i) Isokinetic sampling

j) Sample type: continuous, composite, time proportional, flow proportional, and so on

k) Multiple intakes

l) Multiplexing

m) Dependability

n) Ease of operation

o) Maintenance

p) Availability

Section 12: CORROSION CONTROL

12.1 Corrosive Environment. The corrosive environment found in most wastewater treatment plants can range from mild to aggressive, depending upon the source of the wastewater (industrial loading), the geographical location of the plant (proximity to seacoast locations), the characteristics of the soils in the area, and the chemicals used on site for treatment. While many of the structures associated with WWTPs are made of concrete, there are many applications requiring metal alloys and nonmetallic materials. In most cases, corrosion issues should be addressed in the design stage and appropriate materials selection or corrosion mitigation procedures specified.

Being aware of potential corrosion problems during the design phase will greatly minimize problems that can develop during construction or after the facility is commissioned and operational. The primary design guidance contains salient discussion of the treatment system components typically subject to corrosion, and the specific compounds of concern. These are discussed chapter by chapter in WEF MOP 8. WEF MOP 8 Chapter 8 is devoted entirely to construction materials selection, and contains guidance on evaluating plant exposure conditions, potential for corrosion/deterioration, and design consideration in the selection of materials and construction techniques. WEF MOP FD-5 Chapter 4 also contains guidance for corrosion protection in sewers. This section provides information on a number of corrosion issues that should be handled during design. Additional information is available in Air Force Instruction (AFI) 32-1054, Corrosion Control and MO-307, Corrosion Control, which should be used as a reference guide in addition to the information presented in this section.

12.1.1 Underground Exposures. Underground exposures include piping (steel, ductile iron, reinforced concrete, prestressed concrete) and various concrete structures (foundations, manholes, pump stations, wet-wells, clarifiers). The characteristics of the soils in which materials will be exposed have a direct bearing on their corrosion performance and will directly affect the corrosion mitigation procedures that will be required.

All new designs require geotechnical investigations of the characteristics of the soil. In addition to the normal data developed from these investigations to determine load-bearing

characteristics, other soil tests are needed to determine characteristics that affect corrosion performance.

12.1.1.1 Soil Testing. A number of soil characteristics will have a direct effect on the corrosion performance of certain materials that are buried in the soil. There are a variety of opinions expressed regarding the interpretation of soil data; however, most authorities generally agree with the information presented in Table 21.

These data are easily determined during the geotechnical assessment of the plant site. From these results, the type of cement required can be determined (for sulfate resistance). In addition, the soil resistivity may be used to determine the need for corrosion protection for buried metallic pipelines, such as ductile iron or steel pipe. Additional information on the requirements for cathodic protection and protective coatings is discussed in par. 12.3.

Table 21
Critical Soil Parameters

Parameter	Criteria
Sulfates	Moderate sulfates: 0.10-0.20% in soils; 150-1,500 ppm in water. Requires <8% tricalcium aluminate (Type II cement). High sulfates: >0.20% in soils; >1,500 ppm in water. Requires <5% tricalcium aluminate (Type V cement).
Chlorides	Presence of chlorides can cause low soil resistivity, <1,500 ohm-cm. The use of a barrier coating is generally required if the chloride levels are >200 ppm.
pH	pH 5 or greater: no additional protection; pH <5 use barrier coating on concrete, coatings and cathodic protection on ferrous metals, or nonmetallic piping material.
Resistivity	0-1,000 ohm-cm: Extremely corrosive. 1,000-3,000 ohm-cm: Very corrosive. 3,000-10,000 ohm-cm: Moderately corrosive. 10,000-30,000 ohm-cm: Slightly corrosive. >30,000 ohm-cm: Noncorrosive.

12.1.2 Submerged Exposures. In a wastewater treatment plant, there is a considerable amount of concrete and metal that is partially or continuously submerged in wastewater. In most

facilities, the wastewater has a nearly neutral pH (7.0). This pH is not significantly aggressive to concrete surfaces. However, most ferrous metals (ductile iron and carbon steel) will be corroded in this water unless other methods of corrosion protection are employed.

12.1.2.1 Concrete Structures. When totally immersed in wastewater, concrete structures are generally uneffected and seldom require additional protection. However, wherever wastewater is agitated (overflowing a weir; falling in a drop-box or manhole), hydrogen sulfide can be released, which creates an acidic environment. This agitation is more prevalent in the primary clarifiers and other equipment upstream of the primary clarifiers (grit basins, headworks, influent sewer lines).

In open structures, the release of hydrogen sulfide to the atmosphere will not always create a corrosion environment. However, covers, overhanging structures, or other equipment that can impede the release of the hydrogen sulfide to the atmosphere can lead to corrosion of the concrete. This often occurs when odor control systems are added, covering equipment that generates the release of hydrogen sulfide. Concrete surfaces in these situations generally require some form of protection against the acidic environment generated by the hydrogen sulfide.

12.1.2.2 Metallic Structures. Metallic structures that are submerged in wastewater will corrode unless they are of alloy construction. Carbon steel, ductile iron, and cast iron will corrode in this environment, which can be accelerated in aeration basins, because of the higher oxygen content present. In most submerged applications, protective coatings should be provided on the exterior surfaces of carbon steel, ductile iron, and cast iron. Equipment made of these materials includes piping, sluice gates, wall penetrations, and pipe thimbles.

Stainless steel alloys are preferred for immersion applications. In most applications, the 300-series stainless steels are preferred.

12.1.3 Atmospheric Exposure. The atmosphere around most wastewater treatment plants is considered to be rather corrosive because of the presence of hydrogen sulfide and high humidity, particularly in confined areas. Often, if the hydrogen sulfide can readily pass into the atmosphere, little corrosion occurs on plant equipment. However, if the release of hydrogen sulfide to the atmosphere is prevented by equipment covers or other

restraints, very aggressive environments can exist, especially just above the water line. In these areas, consideration must be given to providing more resistant materials of construction or protecting the substrate with high performance coating systems.

Often there are background levels of hydrogen sulfide present around a wastewater treatment plant. These low concentrations of hydrogen sulfide can be very corrosive to various electrical and control systems because of the large amount of copper contacts that exist in these systems. Special consideration should be given to these systems to avoid excessive corrosion (see pars. 12.2.4 and 12.2.5).

12.2 Materials of Construction. During the design of a wastewater treatment plant, it is important to accurately define the conditions of service throughout the process. In addition, the flow of the wastewater through the plant should be examined to identify areas where the wastewater will have the potential to release hydrogen sulfide. A preliminary listing of acceptable materials of construction should be developed, based on the information presented in this section and the specific conditions of the wastewater treatment plant.

12.2.1 Concrete Structures. Concrete structures have generally given good performance in most wastewater environments. It is important, however, that American Concrete Institute (ACI) standards and practices be followed for placement of concrete and thickness of cover over reinforcing steel. If high sulfate concentrations are determined to be present, either in the soils or groundwater, specify the appropriate type of cement. Refer to Table 21 for the criteria for specifying the type of cement. If high chlorides are present, it will be necessary to specify a barrier coating on the exposed concrete surfaces.

Waterproof all underground structures against intrusion of water or moisture through the walls. Waterproofing is especially important if the structure will be coated on the inside surfaces. Hydrostatic pressure through a concrete wall will cause failure of coatings on the inside surfaces. In areas of known or suspected exposure to hydrogen sulfide, the use of a high-performance coating system should be specified. See par. 12.3.1 for details.

12.2.2 Buildings. Customary architectural designs of buildings may be used for most wastewater treatment plant

designs, provided that appropriate steps are taken to insure that corrosion protection is provided. Concrete, concrete masonry units, metal-sided buildings, and pre-cast concrete units are acceptable for most applications.

12.2.2.1 Structural Steel. Structural steel will require protective coatings in all exposures. See par. 12.3.1 for details about surface preparation and coating selection. Preferably, complete the surface preparation and application of the prime coat in the fabrication shop before delivery to the job site. Application of the finish coat can then be done in the field.

12.2.2.2 Fasteners. Specifying the proper fasteners for various exposures in a wastewater treatment plant is very important. The following guidelines should be applied to selecting fasteners:

a) Submerged service will require Type 316 stainless steel adhesive or embedded type concrete anchors and bolts. Embedded anchor bolts should be specified to be coated with fusion-bonded epoxy to prevent contact with reinforcing steel, thus reducing the likelihood of galvanic corrosion.

b) In splash or wet areas, specify Type 316 stainless steel for all fasteners.

c) For atmospheric (exterior) exposures, Type 304 stainless steel is adequate.

d) For interior exposures, with high humidity or hydrogen sulfide present, specify Type 304 stainless steel.

e) In dry, nonprocess exposures, mechanically galvanized steel fasteners are acceptable (refer to ASTM, B695, Specification of Coatings of Zinc Mechanically Deposited on Iron and Steel).

12.2.2.3 Fabricated Metalwork. Unless the wastewater contains several hundred ppm of chloride ions, Type 304 stainless steel is adequate for most applications requiring stainless steel construction. The use of low-carbon (L-grade) steel is preferred for fabrications that have a considerable amount of welding.

All stainless steel fabrications must be properly cleaned and passivated after fabrication. All specifications for

stainless steels should require cleaning and passivating in accordance with ASTM A380, Standard Practice for Cleaning and Descaling Stainless Steel Parts, Equipment, and Systems.

12.2.2.4 Handrails and Grating. Avoid painted, carbon steel handrails and grating because of the high maintenance associated with these materials. The following guidelines apply to these items:

a) Aluminum handrails and gratings are acceptable in most areas of a wastewater treatment plant. Stainless steel fasteners and hold-down clips should be used, following the criteria presented in par. 12.2.2.2. Handrails should be fastened to floors or walls with cast-aluminum base plates. Aluminum components should not be cast or embedded in concrete because the high alkalinity of the concrete will cause accelerated corrosion of the aluminum. Where aluminum is in contact with concrete surfaces, it should be coated with a bituminous coating. Do not use aluminum in any area where lime, limestone, or sodium hydroxide (caustic) is being handled or stored.

b) Stainless steel handrails and gratings are also acceptable and are used much like the aluminum ones. However, stainless steel in contact with concrete does not require coating. Stainless steels may be used in lime and caustic areas.

c) In chemical handling areas (see par. 12.2.6) use caution with applications of either aluminum or stainless steel. The use of fiberglass-reinforced plastic (FRP) is generally preferred in these applications.

12.2.3 Mechanical Items. Conventional mechanical items may be used with good performance in most applications in a wastewater treatment plant. The exception would be in the chemical handling systems, described in par. 12.2.6, where more corrosion resistant materials are required.

12.2.3.1 Piping. Nearly every type of piping material has been used with good success in WTTPs. However, because of the corrosive conditions that can exist, it is important that the conditions of service be accurately determined when specifying pipe materials. In certain installations, it may be a requirement that double-containment of the piping be required. This is especially true of chemical transfer lines when they are buried.

a) Ductile Iron Pipe. This type of pipe may be used in atmospheric exposures but should be protected with an appropriate coating system (par. 12.3.1). The process used to produce ductile iron pipe (deLavaud process) creates an external surface on the pipe that requires special skills to prepare the surface for coating application. The producers of ductile iron pipe have these skills and should be used to prepare the surface and prime ductile iron pipe that requires painting.

b) Copper Pipe. Only use copper pipe in areas where hydrogen sulfide is not expected to exist. Copper and its alloys are extremely sensitive to exposure to hydrogen sulfide. Because of the galvanic relationship between copper and ferrous piping, copper pipe should be dielectrically insulated from ferrous piping. Use dielectric unions or flanges.

c) Carbon Steel. Carbon steel may be used in most applications but requires protection against corrosion. In underground service, it must be coated with an appropriate system (par. 12.3.1) for underground applications, which is supplemented by the application of cathodic protection (par. 12.3.2). This coating is not necessary if the piping is encased in concrete. Cathodically protected pipelines should be electrically isolated from all other structures with dielectric flanges or unions. Aboveground and immersion applications require an appropriate coating system (par. 12.3.1). Thermally insulated pipe should be cleaned and primed before the insulation material is applied. Using this procedure will minimize the possibility of corrosion under the insulation, which can exist undetected.

d) Stainless Steel. Stainless steel is frequently used in immersion applications, such as for air piping in aeration basins. Under most environments, Type 304 is adequate. However, if the chloride levels in the wastewater are several hundred ppm, then Type 316 stainless steel should be specified. Stainless steel pipe is appropriate for certain chemical handling systems (see par. 12.2.6).

e) Nonmetallic Piping. Piping such as PVC, chlorinated polyvinylchloride (CPVC), and FRP may be used successfully in many applications. Thermal plastic materials (PVC, CPVC) have limited temperature resistance and should be derated as service temperatures increase above ambient. Thermal-setting materials (FRP) have higher temperature/pressure ratings. Both materials have significant coefficients of thermal

expansion. Therefore, it is critical that proper layout, support, and restraint be considered to avoid failure.

f) Pipe Hangers. For all piping systems, specify pipe hangers that provide maximum corrosion resistance with little maintenance. Type 304 stainless steel is preferred in most applications; however, FRP and plastisol-coated carbon steel may also be used.

12.2.3.2 Gates and Weirs. Gates and weirs should be specified to provide good performance in immersion applications. Sluice gates constructed of cast iron materials should be protected with a proper coating system (par. 12.3.1). Bronze should be specified for seats and wedges, with Type 304 or 316 stainless steel for stems, washers, and nuts.

Specify slide gates, weir gates, and weirs as Type 304 stainless steel, aluminum or nonmetallic (FRP). Stainless steel or nonmetallic material is recommended in applications where inspection and maintenance may be limited. If aluminum is used, coat it on surfaces in direct contact with concrete (par. 12.3.1). Coated steel is not recommended for weirs because of the difficulty in applying and maintaining paint on the sharp edges.

12.2.4 Electrical Equipment. Electrical equipment located in aggressive atmospheres within the wastewater treatment plant should be provided with appropriate corrosion protection or constructed of resistant materials.

12.2.4.1 Raceways. Raceways in atmospheric and interior applications may be aluminum, galvanized, PVC, or PVC-jacketed steel. In wet (humid) process environments, specify PVC or PVC-jacketed steel. Hardware and accessories should be of similar materials. Mounting hardware (metal framing support systems) may be galvanized, aluminum, or PVC jacketed as appropriate for the service conditions. Repair cut edges of galvanized or PVC-jacketed materials with the appropriate repair system. Cable trays may be aluminum or FRP, depending on the specific exposure.

12.2.4.2 Switchgear and Motor Control Centers (MCCs). Install switchgears and MCCs in electrical rooms with filtered, conditioned air sources to minimize exposure to moisture and hydrogen sulfide. Provide vapor phase inhibitor (VPI) devices in cabinets, both during the construction period and after operation. The following materials are suggested for these items:

Cabinets	Factory finished, usually baked epoxy enamel
Buss bars	Tinned copper or aluminum
Connections	Tinned

12.2.4.3 Outdoor Enclosures and Lighting. Use Type 304 stainless steel, aluminum, or FRP for these pieces of equipment. Interior process areas with moisture and/or hydrogen sulfide should use similar material.

12.2.5 Instruments and Control Systems. Specify these systems to withstand the environment to which they are exposed. Generally, the specific information listed under par. 12.2.4 will be applicable to instrument and control equipment. Direct exposure to process fluids and chemicals, such as sensors, requires alloys that will resist the exposure. For direct contact with wastewater, Type 304 or 316 stainless steel is preferred. For exposures to specific chemicals, the exposed elements should resist the chemical exposure (see par. 12.2.6).

12.2.6 Chemical Handling Systems. A number of chemicals may be used in a wastewater treatment plant. Many are very aggressive to materials and should be carefully evaluated when specifying storage tanks, piping, valves, and pumps. Chemical storage facilities are usually required to be within a secondary containment area that should also be protected against the specific chemical exposure. Specific coating systems for chemical containment areas are given in par. 12.3.1. Table 22 lists the preferred materials of construction for most of the chemicals associated with wastewater treatment plants (the first material listed is preferred). If linings are required for chemical storage tanks or wastewater equipment, they should be fabricated in accordance with National Association of Corrosion Engineers (NACE) Standard RP0178, Fabrication Details, Surface Finish Requirements, and Proper Design Considerations for Tanks and Vessels to be Lined for Immersion Service.

12.2.6.1 Chlorine Gas. Normally, chlorine gas is handled in carbon steel equipment leading to the vaporizer. Downstream of the vaporizer (low pressure), the preferred piping is nonmetallic. Dry chloride (liquid or gaseous) is not corrosive to carbon steel. However, once moisture is present in the gas, it is very corrosive to all but the most exotic metals, requiring the use of nonmetallics.

12.2.6.2 Ferric Chloride. This material is acidic and is very corrosive to many materials of construction. Beyond the chemical storage and containment area, any surface exposed to ferric chloride will be deteriorated. Concrete floors and the reinforcing steel in the concrete will be rapidly attacked if exposed to this chemical.

12.2.6.3 Hydrogen Peroxide. Hydrogen peroxide is a very strong oxidizer and can be rather unstable under certain conditions. While not considered explosive, if rapid decomposition takes place, it can be rather violent, leading to rapid pressurization of tanks and piping. If not properly vented, this pressurization can take on the characteristics of an explosion. Before placing a tank into peroxide service, it should be cleaned and passivated using an oxidizing acid, such as nitric acid. Producers and suppliers of hydrogen peroxide will perform this service.

12.2.6.4 Sodium Hydroxide and Sodium Hypochlorite. Sodium hydroxide and sodium hypochlorite storage tanks require special construction for FRP materials. In both services, it is recommended that the interior surfacing veil be a synthetic material rather than glass fiber. In addition, it is recommended that post-curing of the tank be performed using hot air, in accordance with the resin manufacturer’s recommendations.

All FRP tanks should be fabricated in accordance with ASTM D3299, Standard Specification for Filament-Wound Glass-Fiber-Reinforced Thermoset Resin Chemical-Resistant Tanks, or ASTM D4097, Standard Specification for Contact-Molded Glass-Fiber-Reinforced Thermoset Resin Chemical-Resistant Tanks. These are atmospheric storage tanks and should be properly vented to avoid any over pressurization.

12.2.6.5 Concentrated Sulfuric Acid. Systems must be carefully designed to withstand the aggressive nature of this acid. Although bare carbon steel may be used in this service, it is very sensitive to fluid velocities in piping systems and will develop a sulfate sludge in storage tanks that presents a problem to remove. For that reason, phenolic-lined steel tanks with stainless steel piping are preferred.

Details for designing sulfuric acid may be found in NACE Standard RP0391, Materials for the Handling and Storage of Concentrated (90 to 100%) Sulfuric Acid at Ambient Temperatures.

Table 22
Materials of Construction - Chemical Handling Facilities

Chemical	Tanks	Pumps	Pipe	Valves
Alum	FRP	Nonmetallic	PVC, CPVC, FRP	Nonmetallic
Chlorine	Steel cylinders	N/A	Carbon steel to vaporizer	Carbon steel
Ferric Chloride	FRP, rubber-lined steel	Nonmetallic or rubber lined	FRP, CPVC, PVC, rubber-lined steel	Rubber lined, CPVC
Ferrous Sulfate	FRP	Nonmetallic	PVC, CPVC, FRP	Nonmetallic
Hydrogen Peroxide	Aluminum Alloy 5254, Type 316L stainless steel	Type 316 stainless steel, Teflon	Aluminum, Type 316L stainless steel	Type 316 stainless steel, Teflon lined
Methanol	Carbon steel	Cast steel	FRP, carbon steel	Carbon steel
Ozone	N/A	N/A	Type 316 stainless steel	CF-8M
Polymers	FRP	Nonmetallic	PVC, CPVC	Nonmetallic
Sodium Bisulfite	FRP	Nonmetallic	PVC, CPVC, FRP	Nonmetallic or plastic lined
Sodium Hydroxide	FRP, special construction	Stainless or carbon steel	CPVC, FRP, stainless steel	Stainless steel, nonmetallic
Sodium Hypochlorite	FRP, special construction	Nonmetallic	FRP, CPVC	Nonmetallic or plastic lined
Sulfur Dioxide	Carbon steel	N/A	Carbon steel	Carbon steel
Concentrated (93%) Sulfuric Acid	Phenolic lined steel	CN-7M (Alloy 20)	Type 304 stainless, 6 fps maximum	CN-7M for throttling, CF-8M for shut-off

12.3 Corrosion Control. In addition to the proper selection of construction materials for the various equipment and systems associated with a wastewater treatment plant, there are other methods of controlling corrosion. With the exception of critical service applications or extremely corrosive environments, carbon steel and ductile iron are still the primary materials for much of the equipment provided for a wastewater treatment plant. While carbon steel and ductile iron (ferrous materials) do have acceptable corrosion resistance in some environments, they still require protection against the high moisture and the hydrogen sulfide that is so prevalent. If not for corrosion resistance, then some techniques are required just for aesthetic reasons.

The two most common methods to provide additional protection against corrosion involve the use of protective coatings and linings on ferrous surfaces. In immersion or buried applications, the protection provided by the coatings is usually supplemented by the application of cathodic protection.

12.3.1 Protective Coatings. With the exception of chemical storage containment areas, the environments found in a wastewater treatment plant are not excessively aggressive to high-quality coating systems.

In most nonimmersion, process environments (both interior and exterior), a coating system based on epoxy primer with a polyurethane finish coat is preferred. This combination provides excellent color and gloss retention, good durability, and minimal maintenance. In interior, nonprocess areas, an alkyd enamel system will provide good service. For immersion service, coal-tar epoxy or straight epoxy materials have been used for many years.

12.3.1.1 Surface Preparation. Critical to long-term performance of any coating system is the surface preparation. Industrial standards prepared by the SSPC should be specified and followed for all coating applications. Table 23 lists the SSPC surface preparation standards.

For immersion applications, SSPC SP5 is required. For most process areas, SSPC SP10 is preferred. For less aggressive environments, SSPC SP6 is acceptable. Hand- and power-tool cleaning methods should only be used for repair and touch-up.

Table 23
Steel Structures Painting Council Surface Preparation Standards

Designation	Title	Application
SSPC SP1	Solvent Cleaning	To remove oil and grease from surface
SSPC SP2	Hand Tool Cleaning	To remove loose surface contaminants with non-power tools
SSPC SP3	Power Tool Cleaning	To remove loose surface contaminants with power tools
SSPC SP5	White Metal Blast Cleaning	Optimum surface preparation; required for immersion service
SSPC SP6	Commercial Blast Cleaning	Removes most surface contaminants; used for less aggressive environments
SSPC SP7	Brush-Off Blast Cleaning	Removes only loose contaminants; often used to prepare concrete surfaces

Table 23 (Continued)
Steel Structures Painting Council Surface Preparation Standards

Designation	Title	Application
SSPC SP8	Pickling	Chemical cleaning; generally used before hot dip galvanizing
SSPC SP10	Near-White Blast Cleaning	Better than SP6 but not as good as SP5
SSPC SP11	Power Tool Cleaning to Bare Metal	Generally removes all contaminants, but with power tools
SSPC SP12	High-and Ultrahigh-Pressure water Jetting	General clean-up; old concrete

12.3.1.2 Coating Systems A number of coating systems may be selected, depending on the specifics of the exposure. Table 24 gives recommended systems, based on exposure conditions.

Table 24
Suggested Protective Coating Systems (1)

Environment	Description
Submerged or partially submerged metals in wastewater	Epoxy primer with coal-tar epoxy finish coats
Atmospheric exposure in all process areas; interior and exterior	Epoxy primer with polyurethane finish
Exposed metals in nonprocess, interior areas	Rust-inhibitive primer with alkyd enamel finish
Buried steel	Pipe enamels, coal-tar epoxy or pipeline tapes

Table 24 (Continued)
Suggested Protective Coating Systems (1)

Environment	Description
Prep for any galvanized surfaces that require painting	Metal conditioner or wash primer
Touch-up of damaged galvanized surfaces	Organic zinc-rich primer
Suitable for floor coatings in some areas; skid resistant	Epoxy with aggregate added
Chemical resistant coating for concrete or CMU	High build epoxy applied over surfacer
Concrete or CMU wall coating in less aggressive environments	High build epoxy applied over surfacer
PVC or FRP surfaces that may require painting	Polyurethane for color coding or UV protection
For aluminum or galvanized surfaces in contact with concrete, or between dissimilar surfaces	Bituminous paint
For anchor bolts and steel dowels	Fusion-bonded epoxy
Architectural systems; nonprocess or less aggressive environments	Varies with exposure and substrate; generally latex, acrylic latex, or oil-based

(1) See MIL-HDBK-1110/1, Paints and Protective Coatings for Facilities, for details about the specific coating systems described in this table.

12.3.1.3 Chemical Containment. Ensure that containment areas around chemical storage areas are capable of withstanding splash and spills of the contained chemical. The ultimate exposure is total flooding of the containment with the chemical; however, most exposures will be short-term. Table 25 gives recommended

coating systems for the typical chemicals used in a wastewater treatment plant.

Table 25
Concrete Protection - Chemical Containment

Chemical Exposure	Concrete Treatment
Alum	Reinforced polyester or vinylester
Chlorine	None required; gaseous exposure
Ferric chloride	Reinforced polyester or vinylester
Ferrous sulfate	Reinforced polyester or vinylester
Hydrogen peroxide	Reinforced novolac epoxy or vinylester
Methanol	Reinforced novolac epoxy or vinylester
Ozone	None required; gaseous exposure
Polymers	Non-skid epoxy coating
Sodium bisulfite	Reinforced novolac epoxy or vinylester
Sodium hydroxide	Reinforced novolac epoxy
Sodium hypochlorite	Reinforced novolac epoxy
Sulfur dioxide	None required; gaseous exposure
Sulfuric acid	Reinforced novolac epoxy or acid brick

12.3.2 Cathodic Protection. To supplement the normal deficiencies in coating systems, cathodic protection may be provided to coated surfaces. Two basic systems may be used: 1) galvanic anode cathodic protection and 2) impressed current cathodic protection. Cathodic protection may be used to protect interior surfaces of storage tanks, clarifiers, and other metallic equipment, including rake mechanisms. Buried pipelines and tanks may also be protected on the soil side exposure with cathodic protection.

12.3.2.1 Galvanic Cathodic Protection Systems. This form of cathodic protection utilizes the natural electrical potential between two metals. Magnesium and zinc are the most common metals used to cathodically protect steel. Providing a sufficient amount of magnesium anodes, connected to a steel pipeline, will provide cathodic protection of that pipeline for many years.

Most galvanic anode cathodic protection systems for buried pipelines are installed with the following provisions:

a) Anodes buried with the pipeline

b) Test stations, containing wires from the anodes and pipeline, brought to the ground surface

c) Dielectric insulation between cathodically protected pipelines and other structures

The output from the anodes and the electrical potential of the pipeline should be measured on an annual basis by certified corrosion specialists or cathodic protection specialists (persons may be certified by NACE International, Houston, Texas). The effectiveness of the cathodic protection systems also requires the protected pipelines remain electrically isolated from other plant structures.

12.3.2.2 Impressed Current Cathodic Protection Systems. Instead of using the natural electrical potential difference between two metals, cathodic protection can be provided by converting alternating current (AC) to direct current (DC) with a rectifier unit. By forcing the DC to an anode material, the cathodic protection will be provided. Impressed current anode systems will be more complicated than a galvanic anode system. Typical components for a buried pipeline may include:

a) An AC source of power with related breakers, switches, and wiring

b) A rectifier unit, to convert the AC to DC

c) Negative cables from the rectifier to the buried pipeline

d) Positive cables from the rectifier to the buried anodes. The anodes are often graphite or cast iron

e) Test stations containing wires from the buried pipeline

f) Insulated connections to isolate cathodically protected pipeline from other structures

Annual checks of the impressed current cathodic protection systems should be performed by certified personnel.

12.3.2.3 Design. Design cathodic protection systems in accordance with standards developed by NACE International. The following standards should be consulted:

a) RP0169, Control of External Corrosion and Underground or Submerged Metallic Piping Systems

b) RP0572, Design, Installation, Operation, and Maintenance of Impressed Current Deep Groundbeds

c) RP0180, Cathodic Protection of Pulp and Paper Mill Effluent Clarifiers (although the title specifies pulp and paper mills, this standard is applicable to wastewater treatment plant clarifiers)

d) RP0286, The Electrical Isolation of Cathodically Protected Pipelines

e) RP0388, Impressed Current Cathodic Protection of Internal Submerged Surfaces of Steel Water Storage Tanks

f) RP0296, Galvanic Anode Cathodic Protection of Internal Submerged Surfaces of Steel Water Storage Tanks

Perform the design, installation, and initialization of any cathodic protection system under the direction of certified personnel. Additional information regarding cathodic protection may be found in AFI 32-1054.

Appendix A
Wastewater Design Guidance Manuals Cross Reference

Contents Item	Water Environment Federation Set (MOP 8, MOP FD-4, MOP FD-5, MOP FD-6, MOP FD-10, MOP FD-12)	Wastewater Treatment System Design Augmenting Handbook MIL-HDBK-1005/16
General		
Current Status of Wastewater Treatment	MOP 8, Chapter 1	Section 2
Future Trends in Wastewater Treatment	MOP 8, Chapter 1	Section 2
Permitting Requirements for Military Facilities	MOP 8, Chapter 1	Section 2
Federal Facilities Compliance Act (Section 108)		Section 2
Domestic Wastewater Flowrate and Characteristics		
Wastewater Sources	MOP 8, Chapter 2	Section 3
Flow Estimates by Source	MOP 8, Chapter 2	Section 3
Flowrate Variation by Source	MOP 8, Chapter 2	Section 3
Design Flowrate Evaluation and Selection	MOP 8, Chapter 2	Section 3
Wastewater Characteristics	MOP 8, Chapter 2	Section 3
Wastewater Collection and Transmission Systems		
Gravity Sewers	MOP FD-5	
Low-Pressure Systems	MOP FD-12	
Manholes	MOP FD-5, Chapter 7	
Vacuum Sewer Systems	MOP FD-12	Section 5
Pressure Sewer Systems	MOP FD-12	
Small Diameter Gravity Sewers	MOP FD-12	

Appendix A (Continued)

Contents Item	Water Environment Federation Set (MOP 8, MOP FD-4, MOP FD-5, MOP FD-6, MOP FD-10, MOP FD-12)	Wastewater Treatment System Design Augmenting Handbook MIL-HDBK-1005/16
Force Mains	MOP 8, Chapter 5	
Alignment Considerations	MOP FD-5, Chapters 2, 6	
Infiltration/Inflow Evaluation	MOP FD-6, Chapter 4	
Sewer System Rehabilitation	MOP FD-6, Chapter 7	
Pier and Wharf Systems		Section 4
Drydock Facilities		Section 4
Wastewater Pumping Stations		
General Considerations	MOP FD-4, Chapters 1-3	
Wet Well Sizing	MOP FD-4, Chapter 4	
Electrical Equipment	MOP FD-4, Chapter 4	
Instrumentation and Controls	MOP FD-4, Chapter 7	
Submersible Pump Stations	MOP FD-4, Chapters 3, 4	
Suction Lift Stations	MOP FD-4, Chapters 3, 4	
Small Flow Treatment Systems		
Package Plant Systems		Section 6
Septic Tank Systems		Section 6
Waterless Toilets		Section 6
Filtration/Reuse Systems		Section 6
Mound Systems		Section 6
Imhoff Tanks	MOP 8, Chapter 10	

Appendix A (Continued)

Contents Item	Water Environment Federation Set (MOP 8, MOP FD-4, MOP FD-5, MOP FD-6, MOP FD-10, MOP FD-12)	Wastewater Treatment System Design Augmenting Handbook MIL-HDBK-1005/16
Wastewater Treatment Plant Planning and Design Development		
Process/Treatment Objectives	MOP 8, Chapter 2	Section 2
Role of Predesign Studies/Engineering Evaluations	MOP 8, Chapter 2	Section 2
Governing Effluent Limitations	MOP 8, Chapters 2, 3	Section 2
Residual Solids Treatment Standards	MOP 8, Chapter 2	Section 2
Design Period and Population	MOP 8, Chapter 2	Section 3
Design Hydraulic Loadings	MOP 8, Chapter 2	Section 3
Design Mass Loadings	MOP 8, Chapter 2	Section 3
Cold Climate Design Requirements	MOP 8, Chapter 4	Section 2
Engineering Evaluation and Process Selection	MOP 8, Chapter 2	Section 2
Conceptual Process Design	MOP 8, Chapter 2	Section 2
Site Considerations	MOP 8, Chapter 4	
Reliability/Redundancy Considerations	MOP 8, Chapter 4	Section 2
Safety Considerations	Throughout	
Maintainability	MOP 8, Chapter 4	Section 2
Flexibility of Operation	MOP 8, Chapter 4	Section 2
O&M Manuals		Section 2
Startup Training		Section 2

Appendix A (Continued)

Contents Item	Water Environment Federation Set (MOP 8, MOP FD-4, MOP FD-5, MOP FD-6, MOP FD-10, MOP FD-12)	Wastewater Treatment System Design Augmenting Handbook MIL-HDBK-1005/16
Commissioning Certification and Performance Testing		Section 2
Plant Hydraulics		
Flow Rates	MOP 8, Chapter 2	Section 3
Unit Process Hydraulics	MOP 8, Chapter 5	
Plant Pumping Systems	MOP 8, Chapter 5	
Pump Systems	MOP 8, Chapter 5	
Instrumentation and Controls		
Preliminary and Primary Treatment Operations		
Screening	MOP 8, Chapter 9	
Grit Removal	MOP 8, Chapter 9	
Flow Equalization	MOP 8, Chapter 9	
Septage Management	MOP 8, Chapter 9	
Odor Control	MOP 8, Chapter 9	
Primary Clarification	MOP 8, Chapter 10	
Secondary (Biological) Treatment and Clarification		
Activated Sludge Process	MOP 8, Chapter 11	
Trickling Filters	MOP 8, Chapter 12	
Rotating Biological Contactors	MOP 8, Chapter 12	
Aerated Lagoons	MOP 8, Chapter 13	Section 7
Stabilization Ponds	MOP 8, Chapter 13	Section 7
Secondary Clarification	MOP 8, Chapter 11	
Advanced Secondary Biological Treatment	MOP 8, Chapter 15	

Appendix A (Continued)

Contents Item	Water Environment Federation Set (MOP 8, MOP FD-4, MOP FD-5, MOP FD-6, MOP FD-10, MOP FD-12)	Wastewater Treatment System Design Augmenting Handbook MIL-HDBK-1005/16
Tertiary (Advanced) Treatment		
Granular Media Filtration (Suspended Solids)	MOP 8, Chapter 16	
Phosphorus Removal (Chemical Precipitation)	MOP 8, Chapter 16	
Disinfection		
Chlorination	MOP 8, Chapter 14 MOP FD-10, Chapter 5	
Ozonation	MOP FD-10, Chapter 6	
Ultraviolet Disinfection	MOP 8, Chapter 14 MOP FD-10, Chapter 7	
Flow Measurement and Sampling		
Flow Measurement	MOP 8, Chapter 5	Section 11
Sampling		Section 11
Effluent Disposal/ Reclamation		
Land Application	MOP 8, Chapter 13	
Disposal to Groundwater		Section 9
Surface Water Discharge (Outfalls)		Section 9
Solids Handling & Disposal		
Solids Characteristics and Quantities	MOP 8, Chapter 17	Section 10
Regulations Concerning Sludge Reuse and Disposal	MOP 8, Chapter 17	Section 10

Appendix A (Continued)

Contents Item	Water Environment Federation Set (MOP 8, MOP FD-4, MOP FD-5, MOP FD-6, MOP FD-10, MOP FD-12)	Wastewater Treatment System Design Augmenting Handbook MIL-HDBK-1005/16
Sludge Pumping	MOP 8, Chapter 18	Section 10
Sludge Piping	MOP 8, Chapter 18	Section 10
Sludge Pretreatment	MOP 8, Chapter 17	Section 10
Sludge Conditioning	MOP 8, Chapter 19	
Sludge Thickening	MOP 8, Chapter 19	
Sludge Stabilization	MOP 8, Chapter 20	
Thermal Processing	MOP 8, Chapter 21	
Sludge Dewatering	MOP 8, Chapter 19	
Sludge Disposal	MOP 8, Chapter 22	
Instrumentation and Control Systems		
Level of Plant Automation	MOP 8, Chapter 7	
Process Control Narrative	MOP 8, Chapter 7	
Process and Instrumentation Diagrams	MOP 8, Chapter 7	
Telemetry Systems	MOP 8, Chapter 7	
Distributed Control Systems	MOP 8, Chapter 7	
Laboratory and Equipment Considerations		
General Layout	MOP 8, Chapter 4	Section 11
Equipment		Section 11
Chemical Storage and Handling		Section 8
Corrosion Control		Section 12

REFERENCES

NOTE: THE FOLLOWING REFERENCED DOCUMENTS FORM A PART OF THIS HANDBOOK TO THE EXTENT SPECIFIED HEREIN. USERS OF THIS HANDBOOK SHOULD REFER TO THE LATEST REVISIONS OF CITED DOCUMENTS UNLESS OTHERWISE DIRECTED.

FEDERAL/MILITARY SPECIFICATIONS, STANDARDS, BULLETINS, HANDBOOKS, AND NAVFAC GUIDE SPECIFICATIONS:

Unless otherwise indicated, copies are available from the Naval Publishing and Printing Service Office (NPPSO), Standardization Document Order Desk, Building 4D, 700 Robbins Avenue, Philadelphia, PA 19111-5094.

HANDBOOKS

MIL-HDBK-1005/17	Industrial Pretreatment Design Guide and Nondomestic Wastewater Control Handbook
MIL-HDBK-1138	Wastewater Treatment System Operations and Maintenance Augmenting Handbook
MIL-HDBK-1005/8	Domestic Wastewater Control
MIL-HDBK-1005/9	Industrial and Oily Waste Control
MIL-HDBK-1029/1	Graving Drydocks
MIL-HDBK-353	Planning and Commissioning Wastewater Treatment Plants
MIL-HDBK-1100	Paints and Protective Coatings for Facilities

STANDARDS

MIL-STD-101	Color Codes for Pipelines and for Compressed Gas Cylinders
MIL-STD-619 B	
NFGS-02730	Exterior Sanitary Sewer System

NFGS-13110	Cathodic Protection by Galvanic Anodes

NAVY MANUALS, P-PUBLICATIONS, AND MAINTENANCE OPERATING MANUALS:

Available from the DODSSP, Subscriptions Services Desk, 700 Robbins Avenue, Building 4D, Philadelphia, PA 19111-5094. To order these documents: Government agencies must use the Military Standard Requisitioning and Issue Procedure (MILSTRIP); the private sector must write to DODSSP at the address above.

MANUALS

NAVSEA S9086-T8-STM-010/CH-593	Naval Ships' Technical Manual (Chapter 593, Pollution Control)
NAVSEA SO300-A4-MAN-A1B	Naval Vessel Register/Ships Data Bank
DTRC/SME - 91/53	Catalog of Shipboard Pollution Abatement Systems

MAINTENANCE OPERATING MANUALS

MO-307	Corrosion Control

NAVY DEPARTMENT INSTRUCTIONS:

Available from the DODSSP, Standardization Document Order Desk, 700 Robbins Avenue, Building 4D, Philadelphia, PA 19111-5094.

NAVFAC LTR 11012	Cathodic Protection Systems, Interim Technical Guidance
SECNAVIST 5010.1L	Classification of Naval Ships and Craft

AIR FORCE REGULATIONS, MANUALS, INSTRUCTIONS, AND GUIDES:

Unless otherwise indicated, copies are available from the Air Force Publications Distribution Center, 2800 Eastern Boulevard, Baltimore, MD 21220-2896.

AFI 32-1054	Corrosion Control
HQ USAF Memorandum	Oil/Water Separators Operations, Maintenance and Construction (October 21, 1994)
HQ AFCEE Pro-Act Fact Sheet	Oil/Water Separators
AFM 88-11, Volumes 1, 2, and 3	Domestic Wastewater Treatment
AFR 88-19, Volume 1	Arctic and Subarctic Construction General Provisions
ETL 95-2	Preparation of Requirements and Management Plan Packages for Military Construction Program Projects

ARMY REGULATIONS, MANUALS, INSTRUCTIONS, AND GUIDES:

TM 5-814-3	Domestic Wastewater Treatment
ETL 1110-3-466	Selection and Design of OWS at Army Facilities
TM 5-813-8	Evaluation Criteria Guide for Water Pollution
EI 11201	Wastewater Collection and Pumping
TM 5-814-9	Central Vehicle Wash Facilities
TM 5-852-1	Arctic and Subarctic Construction General Provisions

OTHER GOVERNMENT DOCUMENTS AND PUBLICATIONS:

	Municipal Wastewater Lagoon Study, Report to Congress
EPA 600/3-86-005	Ultraviolet Disinfection of Wastewater from Secondary Effluent and Combined Sewer Overflows
EPA 600/4-82-029	Handbook for Sampling and Sample Preservation of Water and Wastewater
EPA 625/1-81-013a	Process Design Manual for Land Treatment of Municipal Wastewater, Supplement on Rapid Infiltration and Overland Flow
EPA SW-870	Lining of Waste Impoundment and Disposal Facilities
EPA/G25/R-92-013	Environmental Regulations and Technology: Control of Pathogens and Vector Attraction in Sewage Sludge (Including Domestic Sewage) Under 40 CFR Part 503
EPA-600/4-82-029	Handbook for Sampling and Sample Preservation of Water and Wastewater
EPA-625/1-79-001	Process Design Manual for Sludge Treatment and Disposal
EPA-625/1-80-012	Process Design Manual for Onsite Wastewater Treatment and Disposal Systems
EPA-625/1-83-015	Design Manual for Municipal Wastewater Stabilization Ponds

FED MCD-54	Wastewater Stabilization Pond Linings

(Unless otherwise indicated, copies are available from U.S. Environmental Protection Agency, Office of Water Program Operations, Washington, DC)

NCEL CR-70.11	Analysis of Wastewater Treatment and Disposal Systems for Advanced Bases
NCEL R-593	Freeze Protection for Freshwater and Sanitary Piping Under Open Piers

(Unless otherwise indicated, copies are available from Naval Facilities Engineering Service Center, Port Hueneme, CA 93043-4328)

CCB	Construction Criteria Base

(Unless otherwise indicated, copies are available from National Institute of Building Services, 1201 L Street, Northwest, Suite 400, Washington, D.C. 20005)

DTRC/SME-91/53	Catalog of Shipboard Pollution Abatement Systems

(Unless otherwise indicated, copies are available from David Taylor Research Center, Bethesda, MD 20084-5000)

AMERICAN PETROLEUM INSTITUTE

API Publication 421	Design and Operation of Oil/Water Separators

(Unless otherwise indicated, copies are available from API, 1220 L Street, Northwest, Washington, D.C. 22005)

AMERICAN WATER WORKS ASSOCIATION (AWWA)

Safety Practice for Water Utilities

(Unless otherwise indicated, copies are available from AWWA, 6666 W. Quincy Avenue, Denver, CO 80235)

AMERICAN SOCIETY OF CIVIL ENGINEERS (ASCE)

Photosynthesis in Sewage Treatment. 1957.

Cold Regions Utilities Monograph. 1996.

(Unless otherwise indicated, copies are available from ASCE, 1015 15th St. NW, Suite 600, Washington, DC 20005)

AMERICAN SOCIETY FOR TESTING AND MATERIALS (ASTM)

ASTM B695, Specification of Coatings of Zinc Mechanically Deposited on Iron and Steel)

ASTM A380, Standard Practice for Cleaning and Descaling Stainless Steel Parts, Equipment, and Systems

ASTM D3299, Standard Specification for Filament-Wound Glass-Fiber-Reinforced Thermoset Resin Chemical-Resistant Tanks

ASTM D4097, Standard Specification for Contact-Molded Glass-Fiber-Reinforced Thermoset Resin Chemical-Resistant Tanks

(Unless otherwise indicated, copies are available from ASTM, 1916 Race St., Philadelphia, PA 19813-1187)

NATIONAL ASSOCIATION OF CORROSION ENGINEERS (NACE)

RP0169, Control of External Corrosion and Underground or Submerged Metallic Piping Systems

RP0178, Fabrication Details, Surface Finish Requirements, and Proper Design Considerations for Tanks and Vessels to be Lined for Immersion Service

RP0180, Cathodic Protection of Pulp and Paper Mill Effluent Clarifiers

RP0286, The Electrical Isolation of Cathodically Protected Pipelines

RP0296, Galvanic Anode Cathodic Protection of Internal Submerged Surfaces of Steel Water Storage Tanks

RP0388, Impressed Current Cathodic Protection of Internal Submerged Surfaces of Steel Water Storage Tanks

RP0391, Materials for the Handling and Storage of Concentrated (90 to 100%) Sulfuric Acid at Ambient Temperatures

RP0572, Design, Installation, Operation, and Maintenance of Impressed Current Deep Groundbeds

(Available from NACE, Post Office Box 218340, Houston, Texas 77218)

STEEL STRUCTURES PAINTING COUNCIL (SSPC)

SSPC SP1	Solvent Cleaning
SSPC SP2	Hand Tool Cleaning
SSPC SP3	Power Tool Cleaning
SSPC SP5	White Metal Blast Cleaning
SSPC SP6	Commercial Blast Cleaning
SSPC SP7	Brush-Off Blast Cleaning
SSPC SP8	Pickling
SSPC SP10	Near-White Blast Cleaning
SSPC SP11	Power Tool to Bare Metal
SSPC SP12	High- and Ultrahigh-Pressure Water Jetting

(Available from SSPC, 40 24th Street, 6th Floor, Pittsburgh, PA 15222-4643.)

WATER ENVIRONMENT FEDERATION (WEF)

WEF MOP 8, Design of Wastewater Treatment Plants, Volumes I and II) (Jointly published with the American Society of

Civil Engineers [ASCE] as Report on Engineering Practice No. 76.)

MOP FD-5, Gravity Sanitary Sewer Design and Construction (Jointly published with ASCE as Report on Engineering Practice No. 60.)

MOP FD-4, Design of Wastewater and Stormwater Pumping Stations

MOP FD-12, Alternative Sewer Systems

MOP FD-6, Existing Sewer Evaluation and Rehabilitation (Jointly published with ASCE as Report on Engineering Practice No. 62.)

MOP FD-10, Wastewater Disinfection

(Available from WEF, 601 Wythe Street, Alexandria, VA 22314-1994)

AUTHORED PUBLICATIONS:

Adams and Eckenfelder. Process Design Techniques for Industrial Waste Treatment.

Aldridge, Thomas D., Jr. "What Is an Oil/Water Separator, and Why do I Need One?" Pollution Equipment News. December 1996.

American Society of Agricultural Engineers. On-Site Sewage Treatment. American Society of Agricultural Engineers, Publication 1-82. St. Joseph, MO 49085. 1984.

BIF/General Signal. Chemicals Used in Treatment of Water and Wastewater/Engineering Data. BIF Technical Bulletin. 5/70 (supersedes 6/61). Ref. 1.21-15.

Boyle, W.C., and R.J. Otis. On-Site Treatment. Environmental Research Information Center, Office of Research and Development. EPA, Cincinnati, OH 45268. 1982.

Clark, Douglas W. Laboratory Planning for Water and Wastewater Analysis. Miscellaneous Report No. M20. New Mexico State University and New Mexico Water Resources Research Institute. 1988.

Curds, C.R., and H.A. Hawkes. Ecological Aspects of Used Water Treatment. Volume 1. Academic Press. 1975.

Driscoll, Fletcher. Ground Water and Wells. 2nd Edition. Johnson Filtration Systems, Inc. 1986.

Ecology and Environment, Inc. Wastewater Pretreatment Systems with Emphasis on Recycling and Reuse. Prepared for Air Combat Command, 1996 Environmental Training Symposium, St. Louis, Missouri. February 12-16, 1996. Prepared by Ecology and Environment, Inc., Lancaster, NY.

Eikum, A.S., and R.W. Seabloom. Alternative Wastewater Treatment. (Reidel-Holland), Kluwer-Academic. 1982.

Fay, S.C., and R.H. Walke. The Composting Option for Human Waste Disposal in the Backcountry. Forest Service Research Note NE-246, N.E. Forest Service, USDA, Upper Darby, PA 19082. 1975.

Fischer, List, Koh, Imberger, and Brooks. Mixing in Inland and Coastal Waters. 1979.

Grady and Lim. Biological Wastewater Treatment: Theory and Applications. Pollution Engineering and Technology Series. Volume 12. Dekker. 1985.

Great Lakes-Upper Mississippi River Board of State Public Health and Environmental Managers (Great Lakes). Recommended Standards for Wastewater Facilities. 1990.

Ground Water Protection Council. Ground Water Protection Council Class II Injection Well Integrity Basic Training Course. Ground Water Protection Council. 1994.

12.3.3 Groundwater Recharge Using Waters of Impaired Quality, National Research Council, National Academy Press, 1994.

Harris, S.E., J.J. Reynolds, D.W. Hill, D.S. Filip, and E.J. Middlebrooks. Intermittent Sand Filtration for Upgrading Waste Stabilization Pond Effluents. JWPCF. 49:83-102. 1977.

Hartenstein, R., and M.J. Mitchell. Utilization of Earthworms and Micro-organisms in Stabilization and Detoxification of Residue Sludges from Treatment of Wastewaters. NSF Report. Grant ENV-7-06994. 1978.

Hutzler, N.J., R.J. Otis, and W.C. Boyle. Field and Laboratory Studies of Onsite Household Wastewater Treatment Alternatives. Proceedings of Ohio Home Sewage Disposal Conference, Ohio State University. Columbus, OH. 1984.

Johnson, A.I., and Donald J. Finlayson. Artificial Recharge of Groundwater. Proceedings of the International Symposium. August 1988. American Society of Civil Engineers.

Kardos, L.T., W.E. Sopper, E.A. Myers, R.R. Parizek, and J.B. Nesbitt. Renovation of Secondary Effluent for Re-use as a Water Resource. Office of Research and Development. EPA-66012-74-016. 1974.

Kreft, P., et al., “Hydraulic Studies and Cleaning Evaluations of Ultraviolet Disinfection Units.” Journal of the Water Pollution Control Federation. Volume 58, 1129. 1986.

Liech, H. New Options for a Sewerless Society. Compost Science. Summer 1976.

Mancini and Barnhart. Advances in Water Quality Improvement. "Industrial Waste Treatment in Aerated Lagoons." 1968.

Metcalf & Eddy, Inc., Wastewater Engineering: Treatment, Disposal, and Reuse. 2nd Edition, New York, NY, McGraw-Hill Book Company. 1991.

Pyne, David. Groundwater Recharge and Wells, a Guide to Aquifer Storage Recovery. Lewis Publishers. 1994.

Ronayne, M.P., R.C. Paeth, and T.J. Osbourne. Intermittent Sand Filter Design and Performance: An Update. Proceedings, 4th N.W. Onsite Wastewater Disposal Short Course. University of Washington. Seattle, WA. 1982.

Wagner, E.G., and J.N. Lanoix. Excreta Control for Rural Area. World Heath Organization. Palais des Nations, Geneva. 1982.

White, Clifford. Handbook and Chlorination and Alternative Disinfectants. Third Edition. 1992.

GLOSSARY

Abbreviation or Acronym	Definition
A/E	architectural engineering
AC	alternating current
ACI	American Concrete Institute
AFFF	aqueous film forming foam
AGE	aircraft ground equipment
API	American Petroleum Institute
ASAE	American Society of Agricultural Engineers
ASCE	American Society of Civil Engineers
ASIP	Army Stationing and Installation Plan
ASR	aquifer storage recovery
ASTM	American Society for Testing and Materials
AWWA	American Water Works Association
BOD	biochemical oxygen demand
BOD_5	5-day biochemical oxygen demand
BTEX	benzene, toluene, ethylbenzene, and xylene
cal/sq m/d	calories per square meter per day
CBOD	carbonaceous biochemical oxygen demand
CE	Civil Engineering
CFR	Code of Federal Regulations
CHT	Collection-Holding-Transfer

CMA	Chemical Manufacturing Association
COE	U.S. Army Corps of Engineers
CPI	corrugated plate interceptor
CPVC	chlorinated polyvinylchloride
cu ft/day	cubic feet per day
cu m/d	cubic meters per day
cu m/d/sq m	cubic meters per day per square meter
CWA	Clean Water Act
DC	direct current
DO	dissolved oxygen
DoD	Department of Defense
DPDO	Defense Property Disposal Office
EPA	U.S. Environmental Protection Agency
FGS	Final Governing Standards
FOTW	federally owned treatment works
fps	feet per second
FRP	fiberglass-reinforced plastic
gpcd	gallons per capita per day
gpd	gallons per day
gpd/in.-mi	gallons per day per inch diameter mile
gpd/sq ft	gallons per day per square foot
gpm	gallons per minute
HDPE	high density polyethylene

hp	horsepower
hp/MG	horsepower per million gallons
HVAC	heating, ventilating and air conditioning
I/I	infiltration and inflow
kg/d	kilograms per day
kg/day/ha	kilograms per day per hectare
kPa	kiloPascals
L	liters
L/s	liters per second
lb/d	pounds per day
Lpcd	liters per capita per day
Lpd	liters per day
Lpd/mm-km	liters per day per millimeter diameter kilometer
Lpd/sq m	liters per day per square meter
m	meter
m/s	meters per second
MCC	motor control center
mg/L	milligrams per liter
mgd	million gallons per day
MI	mechanical integrity
MILCON	Military Construction
mL	milliliter
ML/d	million liters per day

mm	millimeter
MOP	Manual of Practice
MSDS	material safety data sheet
N/A	not applicable
NACE	National Association of Corrosion Engineers
NAF	nonappropriated funds
NCEL	Naval Civil Engineering Laboratory
NFPA	National Fire Protection Association
NPDES	National Pollutant Discharge Elimination System
O&M	operations and maintenance
O_3	ozone
OSHA	Occupational Safety and Health Act
OWS	oil/water separator
PTFE	polytetrafluorothylene
POLs	petroleum, oil, and lubricants
POTW	publicly owned treatment works
PPI	parallel plate interceptor
psig	pounds per square inch gage pressure
PVC	polyvinylchloride
RAMP	Requirements and Management Plan
RAS	return activated sludge
RCRA	Resource Conservation and Recovery Act
RPM	Real Property Maintenance

SAR	sodium exchange capacity/sodium absorption ratio
SCBA	self-contained breathing apparatus
SI	international system
SS	suspended solids
SSPC	Steel Structures Painting Council
SWMU	solid waste management unit
SWOB	ship waste offload barge
TMDL	total maximum daily load
TSS	total suspended solids
UIC	Underground Injection Control Rules
UV	ultraviolet
VPI	vapor phase inhibitor
VSS	volatile suspended solids
WAS	waste activated sludge
WEF	Water Environment Federation
WWTP	wastewater treatment plant

CONCLUDING MATERIAL

CUSTODIANS:

NAVY - YD2

ARMY - CE

AF - 50

PREPARING ACTIVITY:

NAVY - YD2

PROJECT NUMBER:

FACR-1179

STANDARDIZATION DOCUMENT IMPROVEMENT PROPOSAL

INSTRUCTIONS

1. The preparing activity must complete blocks 1, 2, 3, and 8. In block 1, both the document number and revision letter should be given.

2. The submitter of this form must complete blocks 4, 5, 6, and 7.

3. The preparing activity must provide a reply within 30 days from receipt of the form.

NOTE: This form may not be used to request copies of documents, nor to request waivers, or clarification of requirements on current contracts. Comments submitted on this form do not constitute or imply authorization to waive any portion of the referenced document(s) or to amend contractual requirements.

I RECOMMEND A CHANGE:	1. DOCUMENT NUMBER MIL-HDBK-1005/16	2. DOCUMENT DATE *(YYMMDD)* 971031

3. DOCUMENT TITLE WASTEWATER TREATMENT SYSTEM DESIGN AUGMENTING HANDBOOK

4. NATURE OF CHANGE *(identify paragraph number and include proposed rewrite, if possible. Attach extra sheets as needed.)*

5. REASON FOR RECOMMENDATION

6. SUBMITTER

a. NAME *(Last, First, Middle Initial)*	b. ORGANIZATION	
c. ADDRESS *(Include Zip Code)*	d. TELEPHONE *(Include Area Code)* (1) Commercial (2) DSN *(If applicable)*	7. DATE SUBMITTED: *(YYMMDD)*

8. PREPARING ACTIVITY

a. NAME	b. TELEPHONE *(Include Area Code)* (1) Commercial (2) DSN
c. ADDRESS *(Include Zip Code)*	**IF YOU DO NOT RECEIVE A REPLY WITHIN 45 DAYS, CONTACT:** Defense Quality and Standardization Office 5203 Leesburg Pike, Suite 1403, Falls Church, VA 22041-3466 Telephone (703) 756-2340 DSN 289-2340

DD Form 1426, OCT 89

Previous editions are obsolete.