AIR FORCE
QUALIFICATION TRAINING PACKAGE (AFQTP)

FOR

ELECTRICAL POWER PRODUCTION
(3E0X2)

MODULE 28
AFSC SPECIFIC CONTINGENCY RESPONSIBILITIES

TABLE OF CONTENTS

MODULE 28

AFSC SPECIFIC CONTINGENCY RESPONSIBILITIES

AFQTP GUIDANCE

INTRODUCTION 28-4

AFQTP UNIT 1

MOBILE GENERATORS 200 KW OR LESS

SET UP GENERATOR FOR CONNECTION TO LOAD

INSTALL GROUND (28.1.1.1.2.). 28-5
CONFIGURE FOR PROPER VOLTAGE (28.1.1.1.4.) 28-9
CONNECT CABLES (28.1.1.1.5.3.) 28-14
CHECK PHASE ROTATION (28.1.1.1.6.). 28-21

PERFORM:

PRE-OPERATIONAL INSPECTION (28.1.1.2.1.) 28-25
DURING OPERATION INSPECTION (28.1.1.2.2.) 28-36
POST-OPERATIONAL INSPECTION (28.1.1.2.3.) 28-45
SINGLE UNIT OPERATION (28.1.1.2.5.) 28-51
PARALLEL UNIT OPERATION (28.1.1.2.6.) 28-57

MEP-012 GENERATORS

INSTALLATION:

POSITION (28.1.2.2.2.) 28-64
GROUND (28.1.2.2.3.) 28-64

OPERATE:

CONDUCT PRESTART PROCEDURES (28.1.2.6.1.) 28.69
CONDUCT STARTING PROCEDURES (28.1.2.6.2.) 28-73
PERFORM SINGLE UNIT OPERATION (28.1.2.6.3.) 28-77
PERFORM PARALLEL UNIT OPERATION (28.1.2.6.4.) 28-81
PERFORM REMOTE OPERATION (28.1.2.6.5.) 28-85
PERFORM SCHEDULED INSPECTIONS (28.1.2.7) 28-90

TROUBLESHOOTING:

ENGINE SYSTEMS (28.1.2.8.1.) 28-97
HIGH VOLTAGE (28.1.2.8.2.1.) 28-97
LOW VOLTAGE (28.1.2.8.2.2.) 28-97

AFQTP UNIT 2

MOBILE AIRCRAFT ARRESTING SYSTEM (MAAS)

PERFORM UNIDIRECTIONAL INSTALLATION

POSITION TRAILERS (28.2.2.2.) 28-115

CONCRETE

INSTALL ANCHOR PLATES (28.2.2.3.1.) 28-122
INSTALL TURNBUCKLES (28.2.2.3.2.) 28-122

SOIL INSTALL

TRAILER STAKES (28.2.2.4.1.1.) 28-129
TURNBUCKLES (28.2.2.4.1.2.) 28-129

Notice. This AFQTP is *NOT* intended to replace the applicable technical references nor is it intended to replace hands-on training. It is to be used in conjunction with these for training purposes only.

KM STAKELINES (28.2.2.4.1.3.) 28-129
ATTACH KM STAKELINE TO TURNBUCKLE (28.2.2.4.2.) 28-129

LIGHTWEIGHT FAIRLEAD BEAM INSTALLATION
POSITION (28.2.4.1.2.) 28-135
INSTALL OUT BOARD ANCHORING SYSTEM (28.2.4.1.4.) 28-135
PERFORM FINAL ALIGNMENT (28.2.4.1.5.) 28-135
MOBILE AIRCRAFT ARRESTING SYSTEM
ATTACH HOOK CABLE (28.2.5.) 28-143
TENSION HOOK CABLE (28.2.6.) 28-147
PROOFLOAD INSTALLATION (28.2.7.) 28-152
PERFORM MAAS PERIODIC INSPECTION AND PREVENTIVE MAINTENANCE
DAILY (28.2.9.1.) 28-157
WEEKLY (28.2.9.2.) 28-166
MONTHLY (28.2.9.3.) 28-173
QUARTERLY (28.2.9.4.) 28-180
SEMI-ANNUAL (28.2.9.5.) 28-186
AFTER-ARRESTMENT (28.2.9.6.) 28-191
TROUBLESHOOT MAAS:
BRAKE ASSEMBLY (28.2.10.1.) 28-197
REWIND ASSEMBLY (28.2.10.2.) 28-197
HYDRAULIC SYSTEM (28.2.10.3) 28-197
TRAILER HYDRAULIC SYSTEM (28.2.10.4.) 28-197

AFQTP UNIT 4

EXPEDIENT BEDDOWN METHODS
HARVEST FALCON (HF) ASSETS
HF ELECTRICAL DISTRIBUTION SYSTEM
CONNECT GENERATOR TO SDC (28.4.2.3.2.) 28-207

REVIEW ANSWER KEY KEY-1

CORRECTIONS/IMPROVEMENT LETTER ..... APPENDIX A

Career Field Education and Training Plan (CFETP) references from 1 Aug 02 version.

OPR: HQ AFCESA/CEOF
(SMSgt Michael A. Trevino)
Supersedes AFQTP 3E0X2-30, 1 Oct 99

Certified by: HQ AFCESA/CEOF
(CMSgt Myrl F. Kibbe)
Pages: 219/Distribution F

Notice. This AFQTP is *NOT* intended to replace the applicable technical references nor is it intended to replace hands-on training. It is to be used in conjunction with these for training purposes only.

AIR FORCE QUALIFICATION TRAINING PACKAGES
FOR
ELECTRICAL POWER PRODUCTION
(3E0X2)

INTRODUCTION

Before starting this AFQTP, refer to and read the "AFQTP TRAINER/TRAINEE GUIDE."

AFQTPs are mandatory and must be completed to fulfill task knowledge requirements on core and diamond tasks for upgrade training. ***It is important for the trainer and trainee to understand*** that an AFQTP ***does not*** replace hands-on training, nor will completion of an AFQTP meet the requirement for core task certification. AFQTPs will be used in conjunction with applicable technical references and hands-on training.

AFQTPs and Certification and Testing (CerTest) must be used as minimum upgrade requirements for Diamond tasks.

MANDATORY minimum upgrade requirements:

Core task:
AFQTP completion
Hands-on certification

Diamond task:
AFQTP completion
CerTest completion (80% minimum to pass)

Note: *Trainees will receive hands-on certification training when equipment becomes available either at home station or at a TDY location*.

Put this package to use. Subject matter experts under the direction and guidance of HQ AFCESA/CEOF revised this AFQTP. If you have any recommendations for improving this document, please contact the Electrical Power Production Career Field Manager at the address below.

HQ AFCESA/CEOF
139 Barnes Dr. Suite 1
Tyndall AFB, FL 32403-5319
DSN: 523-6392, Comm: (850) 283-6392
Fax: DSN 523-6488
E-mail: ceof.helpdesk@tyndall.af.mil

Notice. This AFQTP is *NOT* intended to replace the applicable technical references nor is it intended to replace hands-on training. It is to be used in conjunction with these for training purposes only.

MOBILE GENERATORS 200 KW OR LESS

SET UP GENERATOR FOR CONNECTION TO LOAD

MODULE 28 **AFQTP UNIT 1**

INSTALL GROUND (28.1.1.1.2.)

Notice. This AFQTP is *NOT* intended to replace the applicable technical references nor is it intended to replace hands-on training. It is to be used in conjunction with these for training purposes only.

INSTALL GROUND

Task Training Guide

STS Reference Number/Title:	28.1.1.1.2., Install ground (Mobile Generators 200 KW or Less).
Training References:	1. 35C2 series Technical Orders (TOs): 1.1. TO 35C2-3-445-1, *MEP-004A*, (Table 3-1). 1.2. TO 35C2-3-446-1, *MEP-005A*, (Table 3-1). 1.3. TO 35C2-3-444-1, *MEP-006A*, (Table 3-1). 1.4. TO 35C2-3-442-11, *MEP-007B*, (Table 3-2). 1.5. TO 35C2-3-443-11, *MEP-009B*, (Table 3-2). 2. Commercial Manuals. 3. National Fire Protection Agency Regulations. 4. Career Development Course (CDC) 3E052A Volume 2, Unit 3, *Grounding Fundamentals* and Volume 1, Unit 6, Section 065, *Generator Operation.* 5. Air Force Instruction (AFI) 32-1065, *Grounding Systems*. 6. Air Force Qualification Training Package (AFQTP) 3E0X2 Module 16, 1 Aug 02: *Generator Set Grounding Fundamentals.* 7. CD-ROM AFQTP 3E0X2 Electrical Power Production, Version 1.0, Mar 99: *Power Production Test Equipment.* 8. Local Procedures.
Prerequisites:	1. **Possess as a minimum a 3E032 AFSC.** 2. **Review the following references:** 2.1. 35C2 series TOs. 2.2. CDC 3E052A Volume 1, Unit 6, Section 065, and Volume 2, Unit 3. 2.3. CD-ROM AFQTP 3E0X2 Electrical Power Production, Version 1.0, Mar 99: *Power Production Test Equipment.* 3. **Complete AFQTP 3E0X2 Module 16, 1 Aug 02: *Generator Set Grounding Fundamentals*.**
Equipment/Tools Required:	1. Computer to support AFQTP CD-ROMs. 2. Applicable technical references. 3. General tool kit. 4. Grounding kit. 5. Generator. 6. Personal safety equipment.
Learning Objective:	1. Identify facts and terms pertaining to the installing an electrical grounding system. 2. Identify the different kinds of grounding system and purpose. 3. Given the proper equipment, properly install an equipment ground to provide a metallic connection with the earth and equipment.

Notice. This AFQTP is *NOT* intended to replace the applicable technical references nor is it intended to replace hands-on training. It is to be used in conjunction with these for training purposes only.

INSTALL GROUND

Task Training Guide (Continued)

Samples of Behavior:	1. Trainee will be able to identify parts, tools, and basic facts pertaining to the installation of grounding systems. 2. Trainee will be able to name the different kinds of grounds. 3. Trainee will be able to identify step necessary to install ground rods. 4. Trainee will be able to demonstrate proper grounding procedures using TO.
Notes:	
If trainee has complete AFQTP 3E0X2 Module 16, 1 Aug 02, he/she meets the certification requirements for this core task.	

Notice. This AFQTP is *NOT* intended to replace the applicable technical references nor is it intended to replace hands-on training. It is to be used in conjunction with these for training purposes only.

INSTALL GROUNDS

1. Background: Distribution system grounds are very important. They allow fuses and other system safety components to operate properly. The most elaborate grounding system you can design may prove ineffective unless the connection of the system to earth is adequate and has a sufficiently low resistance. For safety reasons, electric power systems and equipment are intentionally grounded so that insulation failure results in operation of protective devices to de-energize circuits, thus reducing risk to personnel. The word grounding is used commonly in electric power system work to cover both system grounding and equipment grounding; however, the distinction between system and equipment grounding should be recognized.

1.1. A **system ground** is a connection to ground from one of the conductors of an electric circuit, normally the neutral conductor. The purpose of electrical system grounds is to stabilize voltage to ground and give a low impedance path for fault current.

1.2. Equipment grounding involves interconnecting and connecting to earth all non-current carrying metal parts of an electrical wiring system and equipment connected to the system. The equipment ground is connected to an electrical system ground (neutral) only at the service entrance of a building and should not exceed 25 ohms to ground. The purpose of grounding equipment is to ensure personnel safety, by reducing any charge in an equipment item to near zero volts with respect to ground, without causing a fire or explosive hazard, until the circuit protective device clears the fault.

2. ***Complete the AFQTP 3E0X2 Electrical Power Production, Module 16, 1 Aug 02: Generator Set Grounding Fundamentals. Upon completion of the above-mentioned AFQTP module you will meet all the certification requirements for this task.***

Notice. This AFQTP is *NOT* intended to replace the applicable technical references nor is it intended to replace hands-on training. It is to be used in conjunction with these for training purposes only.

MOBILE GENERATORS 200 KW OR LESS

SET UP GENERATOR FOR CONNECTION TO LOAD

MODULE 28 **AFQTP UNIT 1**

CONFIGURE FOR PROPER VOLTAGE (28.1.1.1.4.)

Notice. This AFQTP is *NOT* intended to replace the applicable technical references nor is it intended to replace hands-on training. It is to be used in conjunction with these for training purposes only.

CONFIGURE FOR PROPER VOLTAGE

Task Training Guide

STS Reference Number/Title:	28.1.1.1.4., Configure for proper voltage (Mobile Generators 200 KW or Less).
Training References:	1. 35C2 series Technical Orders (TOs): 1.1. TO 35C2-3-445-1, *MEP-004A*, (Table 3-1). 1.2. TO 35C2-3-446-1, *MEP-005A*, (Table 3-1). 1.3. TO 35C2-3-444-1, *MEP-006A*, (Table 3-1). 1.4. TO 35C2-3-442-11, *MEP-007B*, (Table 3-2). 1.5. TO 35C2-3-443-11, *MEP-009B*, (Table 3-2). 2. Commercial Manuals. 3. Local Procedures.
Prerequisites:	1. **Possess as a minimum a 3E032 AFSC.** 2. **Review the following references:** 2.1. 35C2 series TOs. 2.2. Commercial Manuals. 2.3. Local Procedures.
Equipment/Tools Required:	1. Applicable technical references. 2. General tool kit. 3. Generator. 4. Personal safety equipment.
Learning Objective:	Configure generator for proper voltage.
Samples of Behavior:	The trainee will be able to configure for proper voltage.
Notes:	
1. To successfully complete this element follow the steps outlined in the applicable technical manual exactly--no exceptions. 2. Any safety violation is an automatic failure.	

Notice. This AFQTP is *NOT* intended to replace the applicable technical references nor is it intended to replace hands-on training. It is to be used in conjunction with these for training purposes only.

CONFIGURE FOR PROPER VOLTAGE

1. Background: Generators can be connected in many different voltage configurations, each requiring a physical adjustment. The reconnection board assembly allows the changing of the alternator's output voltage on tactical units. The tactical generator set is capable of either 120/208 volts AC or 240/416 volts AC output. Repositioning the voltage connection board will change the output voltage. The position of the voltage reconnection board connects the six windings of the alternator in parallel for 120/208 Volts AC and in series for 240/416 volts AC.

NOTE TO TRAINER:

The following steps **WILL NOT** supersede the TO/manufacture's operating instructions for your particular generator(s). Insert the TO/manufacture instructions as needed. The following steps serves only as a guide to complete the core task "configure for proper voltage".

NOTE:

A MEP 007B was used to develop the following steps.

2. ***To perform this task, follow these steps:***

SAFETY:

LETHAL VOLTAGES ARE PRESENT AT THE RECONNECTION TERMINAL BOARD OF THE GENERATOR SET DURING OPERATION. DO NOT ATTEMPT TO CONNECT OR DISCONNECT LOAD LEADS WHILE THE GENERATOR SET IS OPERATING.

Step 1: Disconnect the transparent cover by loosening the six quick –release fasteners.

Step 2: Remove twelve nuts.

Step 3: Move change board up or down to align change board arrow with required voltage arrow.

Step 4: Tighten twelve nuts to secure board.

Step 5: Position and secure transparent cover six quick-release fasteners.

Step 6: Start the generator.

Step 7: Observe the Volt AC Meter. If necessary, fine tune by adjusting the Voltage adjust control.

Notice. This AFQTP is *NOT* intended to replace the applicable technical references nor is it intended to replace hands-on training. It is to be used in conjunction with these for training purposes only.

REVIEW QUESTIONS
FOR
CONFIGURE FOR PROPER VOLTAGE

QUESTION	ANSWER
1. Where would you change the voltage on a MEP-007B?	a. Reconnection board assembly. b. Voltage selector switch. c. Move the board to the arrows on the voltage regulator. d. Voltage adjust control.
2. Where would you fine tune the voltage on a MEP-007B?	a. Reconnection board assembly. b. Voltage selector switch. c. Move the board to the arrows on the voltage regulator. d. Voltage adjust control.
3. What are the typical voltage ranges on tactical units (less than 200Kw)?	a. 120/277 or 240/480. b. 120/208 or 240/416. c. 120/220 or 240/415. d. 115/230 or 230/277.
4. What safety pre-caution must you observe before changing the voltage on any generator?	a. Always use face shield and apron. b. Always use high voltage protective tools. c. Always ensure generator is turned off. d. Always ensure generator is grounded.
5. How is the alternator wired to produce 120/208 Volts?	a. Shunt. b. Parallel. c. Series. d. Series-parallel.

Notice. This AFQTP is *NOT* intended to replace the applicable technical references nor is it intended to replace hands-on training. It is to be used in conjunction with these for training purposes only.

CONFIGURE FOR PROPER VOLTAGE

PERFORMANCE CHECKLIST

INSTRUCTIONS:

The trainee must satisfactorily perform all parts of the task without assistance. Evaluate the trainee's performance using this checklist.

DID THE TRAINEE…?	YES	NO
1. Disconnect the transparent cover by loosening the six quick –release fasteners		
2. Remove twelve nuts		
3. Move change board up or down to align change board arrow with required voltage arrow		
4. Tighten twelve nuts to secure board		
5. Position and secure transparent cover six quick-release fasteners		
6. Start the generator		
7. Observe the Volt AC Meter? If necessary, fine tune by adjusting the Voltage adjust control		
8. Observe all safety precautions		

FEEDBACK: Trainer should provide both positive and/or negative feedback to the trainee immediately after the task is performed. This will ensure the issue is still fresh in the mind of both the trainee and trainer.

Notice. This AFQTP is *NOT* intended to replace the applicable technical references nor is it intended to replace hands-on training. It is to be used in conjunction with these for training purposes only.

MOBILE GENERATORS 200 KW OR LESS

SET UP GENERATOR FOR CONNECTION TO LOAD

MODULE 28 **AFQTP UNIT 1**

CONNECT CABLES (28.1.1.1.5.3.)

Notice. This AFQTP is *NOT* intended to replace the applicable technical references nor is it intended to replace hands-on training. It is to be used in conjunction with these for training purposes only.

CONNECT CABLES

Task Training Guide

STS Reference Number/Title:	28.1.1.1.5.3., Connect cables (Mobile Generators 200 KW or Less).
Training References:	1. 35C2 series Technical Orders (TOs): 1.1. TO 35C2-3-445-1, *MEP-004A*, (Table 3-1). 1.2. TO 35C2-3-446-1, *MEP-005A*, (Table 3-1). 1.3. TO 35C2-3-444-1, *MEP-006A*, (Table 3-1). 1.4. TO 35C2-3-442-11, *MEP-007B*, (Table 3-2). 1.5. TO 35C2-3-443-11, *MEP-009B*, (Table 3-2). 2. Commercial Manuals. 3. National Fire Protection Agency Regulations 4. Career Development Course (CDC) 3E052A Volume 1, Unit 6, Section 065, *Generator Operation.* 5. Air Force Instruction (AFI) 32-1065, *Grounding Systems*. 6. Air Force Qualification Training Package (AFQTP) 3E0X2 Module 28, 1 Aug 02: *AFSC Specific Contingency Responsibilities (Unit 1, Check Phase Rotation).* 7. Local Procedures.
Prerequisites:	1. **Possess as a minimum a 3E032 AFSC.** 2. **Review the following references:** 2.1. 35C2 series TOs. 2.2. Commercial Manuals. 2.3. CDC 3E052A Vol. 1, Unit 6, Section 065, *Generator Operation.* 3. **Complete AFQTP 3E0X2 Module 28, 1 Aug 02: *AFSC Specific Contingency Responsibilities (Unit 1, Check Phase Rotation).***
Equipment/Tools Required:	1. Personal safety equipment. 2. General tool kit. 3. Generator. 4. Electrical Panel/Secondary Distribution Center (SDC).
Learning Objective:	Given an operation to perform and access to the appropriate equipment, trainee will be able to safely connect a load to a generator set.
Samples of Behavior:	Trainee will be able to perform the correct procedures to safely connect load leads to a generator set.

Notes:

1. To successfully complete this element follow the steps outlined in the applicable technical manual exactly--no exceptions.
2. Any safety violation is an automatic failure.
3. Trainee needs to satisfactory complete Module 28, 1 Aug 02: AFSC Specific Contingency Responsibilities, Unit 1; Check Phase Rotation before starting this task.

Notice. This AFQTP is *NOT* intended to replace the applicable technical references nor is it intended to replace hands-on training. It is to be used in conjunction with these for training purposes only.

CONNECT CABLES

1. Background: Generators can be connected in many different configurations, each requiring load cables. There are also many types of cable connectors/ends, including: load break, quick disconnects and pigtails just to name a few. As an electrical power production specialist, you are required to perform all aspects of connecting and disconnecting generator load cables for circuits. This lesson will concentrate on a single unit facility installation.

NOTE TO TRAINER:
The following steps **WILL NOT** supersede the TO/manufacture's operating instructions for connecting load cable to your particular generator(s). Insert the TO/manufacture instructions as needed. The following steps serves only as a guide to complete the core task "connect cables".

NOTE:
A MEP 007B using a hard-wired configuration was used to develop the following steps.

2. ***To perform this task, follow these steps:***

Step 1: Gather required information.

1.1. When ever you are tasked to provide generator power, it is imperative you determine the following:

1.1.1. What size cable?

1.1.2. How many phases?

1.1.3. What voltage?

1.1.4. What is the load?

1.1.5. What is the KW generator required?

1.2. These questions are just a few you need to ask to effectively support the endeavor you have been task to perform.

NOTE:
There are two important considerations in determining generator cable size. First, consider the distance from the generator to the equipment. Even though the conductor is large enough to safely carry the load current, its length might result in a lumped resistance that produces an excessive voltage drop. This voltage drop could prevent proper operation. Trainers should cover these topics in great detail with the trainee.

NOTE:
To determine the cable size needed to support a load: Always insure you select the appropriate formula for the phases required.

Notice. This AFQTP is *NOT* intended to replace the applicable technical references nor is it intended to replace hands-on training. It is to be used in conjunction with these for training purposes only.

NOTE:

You'll need to decide if the cable is to be installed overhead, buried, or laid on the ground. Naturally, the method of installing the cable depends on the type of material available, local conditions, and the time factor.

Step 2: Gather required equipment. Having the proper equipment (and in working order) will save you time by preventing you from going back to the shop for the tool you forgot. A general toolbox, to including a multi-meter, a phase rotation meter, and proper technical reference are a good start. Bring along other useful items you may think of.

Step 3: Connect load cables to load terminal board and facility (load).

3.1. Ensure the unit is properly shut down and the DC Circuit Breaker (CB1) is pulled out.

3.2. Open the access door to the generator compartment and carefully remove the safety cover from the load terminal board.

SAFETY:

1. LETHAL VOLTAGES ARE PRESENT AT THE LOAD TERMINAL BOARD OF THE GENERATOR SET DURING OPERATION. DO NOT ATTEMPT TO CONNECT OR DISCONNECT LOAD LEADS WHILE THE GENERATOR SET IS OPERATING. DO NOT ATTEMPT TO CONNECT OR DISCONNECT LOAD LEADS WITH THE GENERATOR SET SHUT DOWN AND THE LOAD CONNECTED TO ANOTHER POWER SOURCE, OR WHILE THE GENERATOR SET IS IN PARALLEL TO ANOTHER UNIT THAT IS OPERATING.

2. NEVER RUN CABLES THROUGH THE GENERATOR ACCESS DOORS. IT DOES NOT ALLOW PROPER AIR FLOW FOR COOLING THE UNIT. A DIRECT SHORT TO GROUND WILL OCCUR SHOULD THE PANEL DOOR CUT THROUGH THE INSULATION.

3. WEAR SAFETY GLOVES WHEN HANDLING CABLES.

HINT:

1. Cables may be marked with "bands" of tape to indicate phases, or may have the phases stenciled on the cable.

2. The load terminals will accommodate 2-wire single phase and 4-wire, 3 phase loads. One or more single-phase loads can be served alone or in combinations with 3 phase loads; but the load on any one phase must not exceed 100 percent of the current rating of that phase.

Step 4: Insert load leads through the plate and sleeve assembly and connect as follows:

4.1. Connect the cable marked "L1" to the load terminal marked "L1".

4.2. Connect the cable marked "L2" to the load terminal marked "L2".

4.3. Connect the cable marked "L3" to the load terminal marked "L3".

4.4. Connect the cable marked "L0" to the load terminal marked "L0".

4.5. Tighten the terminal binding nuts with the plastic/phenolic box end wrench and install the safety cover.

Notice. This AFQTP is *NOT* intended to replace the applicable technical references nor is it intended to replace hands-on training. It is to be used in conjunction with these for training purposes only.

Step 5: Ensure the voltage reconnection board is set to the proper voltage. MEP series generators will have a clockwise phase rotation if you connect the red lead to L1, white lead L2 and blue lead L3 of the phase rotation meter to the generator lugs as indicated.

Step 6: Properly ground the generator. Refer to AFQTP 3E0X2 Module 16 for proper grounding procedures.

Step 7: Connect cables to facility isolation switch (double throw). Determine power is de-energized on the generator input lugs of the double throw panel. Use caution when working in the double throw panel because the line side (commercial power input) may be energized.

Step 8: Check for proper phase rotation of facility. Refer to AFQTP 3E0X2 Module 28 Unit 1: *Check Phase Rotation* (28.1.1.1.6.). You are now ready to supply electrical power to the load.

Notice. This AFQTP is *NOT* intended to replace the applicable technical references nor is it intended to replace hands-on training. It is to be used in conjunction with these for training purposes only.

REVIEW QUESTIONS
FOR
CONNECT CABLES

QUESTION	ANSWER
1. You have been tasked to install a generator at bldg.111. What is the first thing you should do?	a. Ground the generator. b. Verify the load requirements. c. Verify the voltage and phase requirements. d. Both b & c.
2. What step must be taken prior to connecting leads to the load terminal board of a MEP 007B?	a. Install safety cover. b. Warm up generator. c. Remove safety cover. d. Tighten lug with phenolic/ plastic wrench.
3. Load cables should always be installed through generator access doors.	a. True. b. False.
4. It is safe to install MEP 007 load cables by hand if generator is off.	a. True. b. False.
5. You have just finished installing the load cables between the generator and the facility, what should be your next step?	a. Chalk the generator set. b. Determine load. c. Check for proper phase sequence. d. Warm-up the generator set.

Notice. This AFQTP is *NOT* intended to replace the applicable technical references nor is it intended to replace hands-on training. It is to be used in conjunction with these for training purposes only.

CONNECT CABLES

PERFORMANCE CHECKLIST

INSTRUCTIONS:

The trainee must satisfactorily perform all parts of the task without assistance. Evaluate the trainee's performance using this checklist.

DID THE TRAINEE…?	YES	NO
1. Gather required equipment and information to install generator		
2. Get the appropriate size cable		
3. Meet phase's requirements		
4. Meet the voltage and frequency requirements		
5. Meet the load demand		
6. Bring a big enough generator to meet the load demand? Was it too big		
7. Ensure the unit was properly shut down and the DC Circuit Breaker (CB1) is pulled out		
8. Properly insert load leads through the plate and sleeve assembly and connect as follows		
9. Properly tighten the terminal binding nuts with the plastic/phenolic box end wrench and install the safety cover		
10. Ensure the voltage reconnection board is set to the proper voltage		
11. Properly connected load cables to load terminal board		
12. Ensure output terminals were de-energized		
13. Properly connected load cables to output terminals		
14. Properly ground the generator		
15. Check for proper phase rotation of facility and compare to power source		
16. Follow all safety precautions		

FEEDBACK: Trainer should provide both positive and/or negative feedback to the trainee immediately after the task is performed. This will ensure the issue is still fresh in the mind of both the trainee and trainer.

Notice. This AFQTP is *NOT* intended to replace the applicable technical references nor is it intended to replace hands-on training. It is to be used in conjunction with these for training purposes only.

MOBILE GENERATORS 200 KW OR LESS

SET UP GENERATOR FOR CONNECTION TO LOAD

MODULE 28 **AFQTP UNIT 1**

CHECK PHASE ROTATION (28.1.1.1.6.)

Notice. This AFQTP is *NOT* intended to replace the applicable technical references nor is it intended to replace hands-on training. It is to be used in conjunction with these for training purposes only.

CHECK PHASE ROTATION

Task Training Guide

STS Reference Number/Title:	28.1.1.1.6., Check Phase Rotation (Mobile Generators 200 KW or Less).
Training References:	1. 35C2 series Technical Orders (TOs): 1.1. TO 35C2-3-445-1, *MEP-004A*, (Table 3-1). 1.2. TO 35C2-3-446-1, *MEP-005A*, (Table 3-1). 1.3. TO 35C2-3-444-1, *MEP-006A*, (Table 3-1). 1.4. TO 35C2-3-442-11, *MEP-007B*, (Table 3-2). 1.5. TO 35C2-3-443-11, *MEP-009B*, (Table 3-2). 2. Commercial Manuals. 3. National Fire Protection Agency Regulations. 4. Career Development Course (CDC) 3E052A Volume 1 Unit 6, Section 065, *Generator Operation* and 3E0X2B Volume 2, Unit 2, Section 204, *Generator Set Operation*. 5. Air Force Instruction (AFI) 32-1065, *Grounding Systems*. 6. CD-ROM Air Force Qualification Training Package (AFQTP) 3E0X2 Electrical Power Production, Version 1, Mar 99: *Power Production Test Equipment.* 7. Local Procedures.
Prerequisites:	1. **Possess as a minimum a 3E032 AFSC.** 2. **Review the following references:** 2.1. Applicable TOs. 2.2. Applicable Commercial Manuals. 2.3. CDC 3E052A Vol. 1 Unit 6 Section 065 and 3E052B Vol. 2, Unit 2, Section 204. 3. **Complete CD-ROM AFQTP 3E0X2 Electrical Power Production, Version 1.0, Mar 99: *Power Production Test Equipment*.**
Equipment/Tools Required:	1. Computer to support AFQTP CD-ROM. 2. Applicable technical references. 3. General tool kit. 4. Phase Rotation Meter. 5. Multi-meter. 6. Generator. 7. Personal safety equipment.
Learning Objective:	To safely determine the phase sequence of the generator and equipment.
Samples of Behavior:	1. Trainee will be able to use of the phase rotation meter. 2. Trainee will be able to determine the phase rotation of two power sources. 3. Trainee will be able to correct the phase rotation if required.
Notes:	
1. To successfully complete this element follow the steps outlined in the applicable technical manual exactly--no exceptions. 2. Any safety violation is an automatic failure.	

Notice. This AFQTP is *NOT* intended to replace the applicable technical references nor is it intended to replace hands-on training. It is to be used in conjunction with these for training purposes only.

CHECK PHASE ROTATION

1. Background: Generators load connections are typically marked (L1, L2, L3, and L0) to indicate the order in which the generator provides phase sequence. The phase sequence on a three-phase circuit directly affects the operation of the equipment on the circuit. Therefore, the way you connect the generator to the load will directly affect the equipment's operation. One of the methods of determining the phase sequence of the equipment that you are connecting is by determining the sequence the commercial or primary power feeding the circuit. To determine the primary phase sequence we have what is commonly referred to as a phase sequence meter.

2. ***Complete the CD-ROM AFQTP 3E0X2 Electrical Power Production, Version 1.0: Power Production Test Equipment. Upon completion of the above-mentioned CD-ROM, properly use a phase sequence meter to check the phase rotation on the primary power source using the step-by-step procedures listed below.***

> **NOTE:**
> The review questions for this material are contained in the above–mentioned CD-ROM.

3. ***To perform this task, follow these steps:***

Step 1: Properly connected meter to the circuit to be tested. (i.e. L1, L2, L3).

Step 2: Start the generator.

Step 3: Properly interpreted the phase rotation meter reading.

Step 4: If correct, stop generator and disconnect meter.

Step 5: If incorrect, stop generator and switch one of the leads.

Step 6: Re-start generator and interpreted the phase rotation meter reading.

Notice. This AFQTP is *NOT* intended to replace the applicable technical references nor is it intended to replace hands-on training. It is to be used in conjunction with these for training purposes only.

CHECK PHASE ROTATION

PERFORMANCE CHECKLIST

INSTRUCTIONS:

The trainee must satisfactorily perform all parts of the task without assistance. Evaluate the trainee's performance using this checklist.

DID TRAINEE…?	YES	NO
1. Use phase sequence meter to check phase sequence		
2. Use phase sequence meter to check phase rotation		
3. Correct phase rotation (if required)		
4. Follow all safety requirements		

FEEDBACK: Trainer should provide both positive and/or negative feedback to the trainee immediately after the task is performed. This will ensure the issue is still fresh in the mind of both the trainee and trainer.

Notice. This AFQTP is *NOT* intended to replace the applicable technical references nor is it intended to replace hands-on training. It is to be used in conjunction with these for training purposes only.

MOBILE GENERATORS 200 KW OR LESS

PERFORM

MODULE 28 **AFQTP UNIT 1**

PRE-OPERATIONAL INSPECTION (28.1.1.2.1.)

Notice. This AFQTP is *NOT* intended to replace the applicable technical references nor is it intended to replace hands-on training. It is to be used in conjunction with these for training purposes only.

PERFORM PRE-OPERATIONAL INSPECTION

Task Training Guide

STS Reference Number/Title:	28.1.1.2.1., Pre-operational inspection (Perform).
Training References:	1. 35C2 series Technical Orders (TOs): 1.1. TO 35C2-3-445-1, *MEP-004A*, (Table 3-1). 1.2. TO 35C2-3-446-1, *MEP-005A*, (Table 3-1). 1.3. TO 35C2-3-444-1, *MEP-006A*, (Table 3-1). 1.4. TO 35C2-3-442-11, *MEP-007B*, (Table 3-2). 1.5. TO 35C2-3-443-11, *MEP-009B*, (Table 3-2). 2. Commercial Manuals. 3. National Fire Protection Agency (NFPA) Regulations. 4. Career Development Course (CDC) 3E052A Volume 1, Unit 6, Section 065, *Generator Operation* and 3E0X2B Volume 2, Unit 2, Section 204, *Generator Set Operation*. 5. Air Force Instruction (AFI) 32-1065, *Grounding Systems*. 6. CD-ROM Air Force Qualification Training Package (AFQTP) 3E0X2 Electrical Power Production, Version 1, Mar 99: *Power Production Test Equipment.* 7. Local Procedures. 8. AFQTP 3E0X2 Module 12, 1 Aug 02: *AFSC Specific Publications*. 9. AFQTP 3E0X2 Module 13, 1 Aug 02: *Electrical Power Production Tools and Test Equipment.* 10. AFQTP 3E0X2 Module 16, 1 Aug 02: *Generator Set Grounding Fundamentals*. 11. Local Procedures.
Prerequisites:	1. **Possess as a minimum a 3E032 AFSC.** 2. **Review the following references:** 2.1. Review CD-ROM AFQTP 3E0X2 Electrical Power Production, Version 1.0, Mar 99: *Power Production Test Equipment.* 2.2. Review CDC 3E052A Volume 1, Unit 6, Section 065, and 3E0X2B, Volume 2, Unit 2, Section 204. 2.3. Applicable TOs, Commercial Manuals, and NFPA Regulations. 2.4. AFI 32-1065. 3. **Complete the AFQTP 3E0X2 Modules 12, 13, and 16.**
Equipment/Tools Required:	1. Computer to support AFQTP CD-ROMs. 2. Applicable technical references. 3. Generic generator set. 4. Personal safety equipment.
Learning Objective:	Given applicable technical references and local directives, perform generator pre-operational inspection IAW prescribed procedures.

Notice. This AFQTP is *NOT* intended to replace the applicable technical references nor is it intended to replace hands-on training. It is to be used in conjunction with these for training purposes only.

PERFORM PRE-OPERATIONAL INSPECTION

Task Training Guide (Continued)

Samples of Behavior:	1. Trainee will be able to perform a pre-operational inspection to include: 1.1. Correct generator fluid level requirements. 1.2. Battery inspection requirements. 1.3. Properly inspect fan belts. 1.4. Access door position requirements 1.5. Requirement for draining condensation from the fuel system. 1.6. Generator set control panel requirements. 1.7. Convenience/slave receptacle requirements.
Notes:	
1. To successfully complete this element follow the steps outlined in the applicable technical manual exactly--no exceptions. 2. Any safety violation is an automatic failure.	

Notice. This AFQTP is *NOT* intended to replace the applicable technical references nor is it intended to replace hands-on training. It is to be used in conjunction with these for training purposes only.

PERFORM PRE-OPERATIONAL INSPECTION

1. Background: Exactly what is a pre-operational inspection? Any idea? Knowing the prefix "pre" means before, you should be able to determine that a pre-operational inspection is an inspection that is done before the generator is operated. But why do you need to do a pre-operational inspection? Actually, there are several reasons why it's necessary, but the main reason is to ensure that the generator set is capable of operating. If you don't check to make sure that there is fuel in the fuel tank, obviously the generator isn't going to start. If the generator doesn't start, the communications facility isn't going to have any power, and you are going to be sitting in the dark unable to perform your mission. Let's go over the things you need to check before starting up the generator set.

1.1. The very first thing you must check when performing a pre-operational inspection is the Mobile Generator/Equipment Operation/Maintenance Log. The log is often kept in a pouch, which is attached to the generator set or IAW local procedures. The log is used to document generator operation as well as record all maintenance actions for that particular generator. Look at the maintenance log to see if there are any open jobs.

1.2. After you have reviewed the back of the Mobile Generator/Equipment Operation/Maintenance Log and verified that the generator set is considered operational, you are ready to continue on with the next step of the pre-operational inspection. The generator ground is one of the most important items to check during the pre-operational check.

> **NOTE:**
> A wide range of generators and references was used to develop the following steps.

2. ***To perform this task, following these steps:***

Step 1: Perform safety inspection:

1.1. Place the unit in STOP/OFF position before starting any inspection.

1.2. Check to ensure guards and/or precautions taken around moving parts shield danger points.

1.3. Ensure equipment ground system is connected. Refer to AFQTP Electrical Power Production Module 16, I Aug 02, Generator Set Grounding Fundamentals.

> **HINT:**
> On Tactical units ensure the Battle short switch is in the up position. In addition you may want to place a CAUTION tag “Men At Work” on the control panel, especially on commercial units.

Step 2: Check/Inspect fuel system:

2.1. Fuel lines, filter casings, and fuel tank for leaks and security.

2.2. Fuel level in DAY and MAIN tanks.

> **NOTE:**
> Refill or notify occupant if less than 1/2 full.

Notice. This AFQTP is *NOT* intended to replace the applicable technical references nor is it intended to replace hands-on training. It is to be used in conjunction with these for training purposes only.

2.3. If equipped, manually start transfer motor on day tank to ensure proper operation.
2.4. Fuel fill cap and strainer for general condition and proper locking.
2.5. Day tank float switch and solenoid valves.
2.6. Strainer for cleanliness.
2.7. Dip the tank for water content/drain water from tank if drain valve if provided.

HINT:
Although the requirements listed are listed in each applicable technical order, it's recommend that the sediment/condensation be drained only at the set tank location.

Step 3: Check/Inspect oil system:

3.1. Oil lines, filters, and filter casings for cracks, leaks, and security.
3.2. Oil level - add as needed.
3.3. Governor oil level and linkage if applicable, add if needed.
3.4. Rotate oil and fuel strainer handles 360 degrees.

Step 4: Check/Inspect cooling system:

4.1. Coolant hoses for cracks, leaks, and security.
4.2. Coolant level - add as needed. (Proper level is two inches below the overflow pipe).
4.3. To ensure adequate fresh air through radiator and heat exchanger.
4.4. To ensure engine heaters are operating properly. If equipped, heater will be on at 40 degrees or less.
4.5. Fan belt(s), i.e., wear, cracks, proper tension.

CAUTION:

1. NEVER ATTEMPT TO CHECK THE COOLANT LEVEL WHEN IT IS HOT. THE COOLING SYSTEM IS PRESSURIZED AND SERIOUS BURNS COULD RESULT IF THE RADIATOR CAP IS REMOVED UNDER THIS CONDITION.

2. NEVER CHECK FAN BELT TENSION WHILE THE GENERATOR SET IS IN OPERATION. THE REASON FOR THIS SHOULD BE OBVIOUS. ALSO, ALWAYS CHECK THE FAN BELT TENSION USING THE BACK OF THE HAND. THIS IS MERELY A SAFETY PRECAUTION IN THE EVENT THE UNIT IS ACCIDENTALLY STARTED WHILE PERFORMING THIS INSPECTION. BY USING THE BACK OF THE HAND, IT IS LESS LIKELY THAT YOUR HAND WILL BE PULLED INTO THE PULLEY AND/OR FAN.

Step 5: Check /Inspect battery system:

5.1. Battery electrolyte level - add as needed.
5.2. Alternator belt for condition and deflection, adjust as needed.

Notice. This AFQTP is *NOT* intended to replace the applicable technical references nor is it intended to replace hands-on training. It is to be used in conjunction with these for training purposes only.

CAUTION:

USE EXTREME CAUTION ANYTIME YOU ARE WORKING ON THE BATTERIES. THE ACID IN THE ELECTROLYTE SOLUTION CAN CAUSE SEVERE BURNS. IF THE ELECTROLYTE SOLUTION COMES IN CONTACT WITH THE SKIN, IMMEDIATELY RINSE OFF THE AFFECTED AREA WITH PLENTY OF CLEAN WATER. DON'T WIPE IT OFF ON YOUR CLOTHING, AS THE ACID IN THE SOLUTION WILL QUICKLY EAT THROUGH THE MATERIAL. IF IT GETS IN YOUR EYES, DO NOT RUB THEM. QUICKLY SEEK ASSISTANCE TO FLUSH OUT YOUR EYES WITH CLEAN WATER.

Step 6: Check/Inspect intake/exhaust system:

6.1. Exhaust extension for condition, tightness, and leakage at seams and point of coupling.

6.2. Drain exhaust condensate trap.

6.3. Air filter for cleanliness and restrictions.

6.4. Check air intake system cleaner for excessive dirt; remove and clean air cleaner panels as required.

Step 7: Other checks/inspections:

7.1. Hydraulic lines and level of fluid in the MEP-105A.

7.2. All linkages, hose clamps, and lines for wear or damage.

7.3. Dead crank switch and ensure that it is on MEP-6.

7.4. Air box drains to insure drains are not plugged.

7.5. Access doors for proper opening and closing. Inspect weather stripping for condition and security.

7.6. Unit is free of corrosion and clean, performed repairs as needed.

7.7. Ensure unit is placed in normal configuration after inspection - Auto position for Auto start units and STOP/OFF for Manual Start units.

7.8. Pull out DC circuit breaker on MEP units.

Step 8: Check/Inspect electrical:

8.1. Fix any defective wiring, if repair takes longer than five minutes refer to higher level.

8.2. Unit for loose, burned, or frayed wiring and connectors for security.

8.3. For loose nuts, bolts, and connections.

8.4. Receptacle.

Step 9: Generator Control Panel

9.1. Wiring for damage and security of connections.

9.2. Ensure Lights operating properly.

9.3. Ensure electrical switches are in the proper position.

Notice. This AFQTP is *NOT* intended to replace the applicable technical references nor is it intended to replace hands-on training. It is to be used in conjunction with these for training purposes only.

NOTE:
When press-to-test lights are depressed, proper operation is indicated when the light illuminates. When released, the light should go out.

Step 10. Check/Inspect auxiliary fuel tank:

10.1. To ensure fuel tank is properly grounded and secured.

10.2. To ensure fuel tank dipstick is available or fuel gauge is properly working.

10.3. To ensure fuel tank dike area is clean and drain valve secured.

10.4. To ensure fuel tank is properly marked with fuel type, tank size, and building number.

Step 11: Check/Inspect generator plant room:

11.1. Check to ensure room heaters are operating properly.

11.2. Attaching hardware is secure.

11.3. Ensure generator facilities are clean and no one is using them as storage areas, sweep, and clean if necessary.

11.4. Ensure the emergency light(s) is operating properly.

11.5. Ensure the unit, automatic transfer switch (ATS), fuel tank, associated switchgear, and site/facility is clean and corrosion free.

Step 12: Check/Inspect fire extinguisher:

12.1. For operational, convenient location, and proper mounting.

12.2. Annotate inspect on inspection form (monthly).

12.3. Identified through the Fire Department.

Step 13: Ensure unit folder has the following current items:

13.1. Operating instructions for starting, operating, transferring load, shutting unit down, and procedures to notify Power Production.

13.2. One line-Connection diagrams.

13.3. Point marked and identified with phase Rotation, Volts, and KW rating.

13.4. Training letter.

13.5. Most recent AF Form 487.

Step 14: Signs:

14.1. Check to ensure unit, site, area, or facility has the following signs:

14.1.1. No Smoking within 50 feet.

14.1.2. Caution Hazardous Noise-Hearing Protection Required.

14.1.3. Warning-Unit Starts Automatically (if automatic).

Step 15: Check/Inspect wheel kit:

15.1. Hand brake linkage for wear and security of attachment.

15.2. Running gear is securely mounted to the skids.

Notice. This AFQTP is *NOT* intended to replace the applicable technical references nor is it intended to replace hands-on training. It is to be used in conjunction with these for training purposes only.

REVIEW QUESTIONS
FOR
PERFORM PRE-OPERATIONAL INSPECTION

QUESTION	ANSWER
1. What is the purpose of the Pre-operational inspection?	a. Ensure that the generator set is capable of operating. b. Ensure the generator set has no outstanding job orders and the status is green. c. Ensure the generator can start. d. Ensure the generator has fuel.
2. What is the first thing you need to check prior to performing a pre-operational check?	a. Fuel. b. Grounding. c. Electrical distribution is connected. d. Generator Log.
3. What is one of the most important steps when performing an operational check?	a. Fuel. b. Grounding. c. Electrical distribution is connected. d. Generator Log.
4. Why do need to be cautious when working on batteries?	a. The acid in the electrolyte solution can cause severe burns. b. The acid can damage the generator. c. If you spill acid, you will need to report it to EPA. d. There is no hazard.
5. When is the cooling system check?	a. During post inspection. b. While unit is running. c. While the cooling system is not hot. d. During pre-operational check.
6. How are belts tension checked?	a. Using the back of the hand. b. Using the front of the hand “in a grasping motion”. c. Using a tachometer. d. Using a ruler.
7. What indicates the proper operation of the press-to-test lights?	a. When press-to-test lights are depressed. b. When press-to-test lights are pressed. c. When press-to-test lights are on. d. When press-to-test lights are off.
8. What document is used to document generator operation and maintenance actions for that particular generator?	a. Generator/Equipment/Maintenance Log. b. AF Form 487. c. AF Form 1167. d. AF Form 637.

Notice. This AFQTP is *NOT* intended to replace the applicable technical references nor is it intended to replace hands-on training. It is to be used in conjunction with these for training purposes only.

PERFORM PRE-OPERATIONAL INSPECTION

PERFORMANCE CHECKLIST

INSTRUCTIONS:

The trainee must satisfactorily perform all parts of the task without assistance. Evaluate the trainee's performance using this checklist.

DID THE TRAINEE….?	YES	NO
1. **Safety:** 1.1. Place the unit in STOP/OFF position before starting any inspection 1.2. Check to ensure guards and/or precautions taken around moving parts shield danger points 1.3. Ensure equipment ground system is connected I/A/W AFQTP Electrical Power Production Module 16		
2. **Fuel System:** 2.1. Check fuel lines, filter casings, and fuel tank for leaks and security 2.2. Check fuel level in Day and Main Tanks 2.3. Switch manual start transfer motor on day tank to ensure proper operation 2.4. Check day tank float switch and solenoid valves, 2.5. Check fuel fill cap and strainer for general condition and proper locking 2.6. Check strainer for cleanliness 2.7. Dip the tank for water content		
3. **Oil System:** 3.1. Check oil lines, filters, and filter casings for cracks, leaks and security 3.2. Check oil level - add as needed 3.3. Check governor oil level and linkage if applicable, add if needed 3.4. Rotate oil and fuel strainer handles 360 degrees.		
4. **Cooling System:** 4.1. Check coolant hoses for cracks, leaks and security 4.2. Check coolant level - add as needed 4.3. Ensure adequate fresh air through radiator and heat exchanger 4.4. Check to ensure engine heaters are operating properly 4.5. Check fan belt		
5. **Battery System:** 5.1. Check battery electrolyte level - add as needed 5.2. Check alternator belt for condition and deflection, adjust as needed		
6. **Intake/Exhaust System** 6.1. Inspect exhaust extension for condition, tightness, and leakage at seams and point of coupling 6.2. Drain exhaust condensate trap 6.3. Check air filter for cleanliness and for restrictions. 6.4. Check air intake system cleaner for excessive dirt; remove and clean air cleaner panels as required		

Notice. This AFQTP is *NOT* intended to replace the applicable technical references nor is it intended to replace hands-on training. It is to be used in conjunction with these for training purposes only.

Continued.

DID THE TRAINEE….?	YES	NO
7. **Other:** 7.1. Inspect hydraulic lines and level of fluid in the MEP-15A 7.2. Inspect all linkages, hose clamps, and lines for wear or damage 7.3. Check dead crank switch and ensure that it is on MEP-6 7.4. Check air box drains to insure drains are not plugged 7.5. Inspect access doors for proper opening and closing 7.6. Inspect weather stripping for condition and security 7.7. Check unit is free of corrosion and clean, performed as needed 7.8. Ensure unit is placed in normal configuration - Auto position for Auto start units and STOP/OFF for Manual Start units		
8. **Electrical:** 8.1. Fix any defective wiring, if repair takes longer than five minutes refer to higher level 8.2. Check unit for loose, burned, or frayed wiring and cannon plugs for security 8.3. Check for loose nuts, bolts, and connections 8.4. Check receptacle inspection		
9. **Generator Control Panel:** 9.1. Wiring for damage and security of connections 9.2. Ensure Lights operating properly 9.3. Ensure electrical switches are in the proper position		
10. **Auxiliary Fuel Tank:** 10.1. Check to ensure fuel tank is properly grounded and secured 10.2. Check to ensure fuel tank dipstick is available or fuel gauge is properly working 10.3. Check to ensure fuel tank dike area is clean and drain valve secured 10.4. Check to ensure fuel tank is properly marked with fuel type, tank size, and building number		
11. **Generator Plant Room:** 11.1. Check to ensure room heaters are operating properly 11.2. Ensure attaching Hardware is secure 11.3. Ensure generator facilities are clean and no one is using them as storage areas, sweep and clean if necessary 11.4. Check to ensure the emergency light(s) is operating properly 11.5. Check to ensure the unit, ATS, fuel tank, associated switchgear, and site/facility is clean 11.6. Check to ensure the unit, ATS, fuel tank, and associated switchgear are free from corrosion		
12. **Check fire extinguisher for:** 12.1. Convenient location 12.2. Proper mounting 12.3. Identified through the Fire Department 12.4. Operational		

Notice. This AFQTP is *NOT* intended to replace the applicable technical references nor is it intended to replace hands-on training. It is to be used in conjunction with these for training purposes only.

Continued.

DID THE TRAINEE….?	YES	NO
13. **Check the unit folder for the following current items:** 13.1. Operating instructions for starting, operating, transferring load, shutting unit down, and procedures to notify Power Production 13.2. One line-connection diagrams 13.3. Point marked and identified with phase Rotation, Volts, and KW rating 13.4. Training letter 13.5. Most recent AF Form 487		
14. **Check to ensure unit, site, area, or facility had the following signs:** 14.1. No Smoking within 50 feet 14.2. Caution Hazardous Noise-Hearing Protection Required 14.3. Warning-Unit Starts Automatically		
15. **Wheel kit:** 15.1. Check hand brake linkage for wear and security of attachment 15.2. Ensure running gear was securely mounted to the skids		

FEEDBACK: Trainer should provide both positive and/or negative feedback to the trainee immediately after the task is performed. This will ensure the issue is still fresh in the mind of both the trainee and trainer.

Notice. This AFQTP is *NOT* intended to replace the applicable technical references nor is it intended to replace hands-on training. It is to be used in conjunction with these for training purposes only.

MOBILE GENERATORS 200 KW OR LESS

PERFORM

MODULE 28 **AFQTP UNIT 1**

DURING OPERATION INSPECTION (28.1.1.2.2.)

Notice. This AFQTP is *NOT* intended to replace the applicable technical references nor is it intended to replace hands-on training. It is to be used in conjunction with these for training purposes only.

PERFORM DURING OPERATION INSPECTION

Task Training Guide

STS Reference Number/Title:	28.1.1.2.2., During operation inspection (Perform).
Training References:	1. 35C2 series Technical Orders (TOs): 1.1. TO 35C2-3-445-1, *MEP-004A*, (Table 3-1). 1.2. TO 35C2-3-446-1, *MEP-005A*, (Table 3-1). 1.3. TO 35C2-3-444-1, *MEP-006A*, (Table 3-1). 1.4. TO 35C2-3-442-11, *MEP-007B*, (Table 3-2). 1.5. TO 35C2-3-443-11, *MEP-009B*, (Table 3-2). 2. Commercial Manuals. 3. National Fire Protection Agency (NFPA) Regulations 110, Table A-6-3-1. 4. Career Development Course (CDC) 3E052A Volume 1, Unit 6, Section 065, *Generator Operation* and 3E0X2B Volume 2, Unit 2, Section 204, *Generator Set Operation*. 5. AFI 32-1062, *Electrical Power Plants and Generators*. 6. AFI 32-1063, *Electric Power Systems.* 7. AFI 32-1064, *Electrical Safe Practices.* 8. Local Procedures. 9. AFQTP 3E0X2 Module 12, 1 Aug 02: *AFSC Specific Publications*.
Prerequisites:	1. **Possess as a minimum a 3E032 AFSC.** 2. **Review the following references:** 2.1. Review CDC 3E052A Volume 1, Unit 6, Section 065, and 3E0X2B, Volume 2, Unit 2, Section 204. 2.2. Applicable TOs, Commercial Manuals, and NFPA Regulations. 2.3. AFIs 32-1062, 32-1063, and 32-1064. 3. **Complete AFQTP 3E0X2 Modules 12, 1 Aug 02: *AFSC Specific Publications*.**
Equipment/Tools Required:	1. Computer to support AFQTP CD-ROMs. 2. Applicable technical references. 3. Generic generator set. 4. Personal safety equipment.
Learning Objective:	1. Given applicable technical references and local directives, perform generator inspection during operation IAW prescribed procedures. 2. Given AFI 32-1062, paragraph 7; generator operating forms; a log book; and local operating instructions; document generator forms and records IAW prescribed procedures.

Notice. This AFQTP is *NOT* intended to replace the applicable technical references nor is it intended to replace hands-on training. It is to be used in conjunction with these for training purposes only.

PERFORM DURING OPERATION INSPECTION

Task Training Guide (Continued)

Samples of Behavior:	1. Trainee will be able to perform a during operation inspection to include: 1.2. Control Panel inspection requirements. 1.3. Fluid level inspection requirements. 1.4. Conducting an overall visual inspection of the generator set. 1.5. Purpose of generator operating forms and generator logbook. 1.6. Completion of generator operating forms and logbook.
Notes:	
1. To successfully complete this element follow the steps outlined in the applicable technical manual exactly--no exceptions. 2. Any safety violation is an automatic failure.	

Notice. This AFQTP is *NOT* intended to replace the applicable technical references nor is it intended to replace hands-on training. It is to be used in conjunction with these for training purposes only.

PERFORM DURING OPERATION INSPECTION

1. Background: While the generator set is operating, you are required to make on-line inspections. The inspections are to ensure the generator set is operating properly and to detect any impending trouble. The generator should be inspected IAW local procedures, usually once every 2 hours during periods of extended operation. There are several areas to be checked during this inspection. However documentation is critical. Without documentation how can anyone realize that the inspection was completed?

1.1. Overall Visual Inspection: Walk around the generator set, open all access doors (if applicable), and use your senses of sight, smell, and hearing to aid in making this inspection. Do you see any leaks? Is there a burning or abnormal smell? Do you hear any loose parts rattling? If you detect minor problems, that can be easily corrected, go ahead and correct them. Major problems, such as broken parts or severe leaks, should be referred to Power Production personnel for repair. Do not attempt to make these major repairs yourself.

CAUTION:

IF YOU ATTEMPT TO WIPE UP SPILLAGE FROM A LEAK, USE EXTREME CARE TO AVOID CONTACT WITH HOT ENGINE COMPONENTS. AS A RULE OF THUMB, IF THE SPILLAGE IS NOT CAUSING A PROBLEM, DON'T ATTEMPT TO CLEAN IT UP UNTIL THE UNIT IS STOPPED AND HAS COOLED DOWN.

1.2. Power Plant Documentation: No matter what type of job you do, there is usually paper work involved. Generator set operation must be documented on the appropriate form. A generator logbook must also be maintained to document certain information.

1.2.1. Power plant documentation varies from plant to plant, Major Command (MAJCOM) to MAJCOM, and even state to state. Whether the plant is standby or prime, composed of MEP-012s or Caterpillars, or fueled by diesel or turbine power, this has a bearing on the type and extent of documentation. State and local environmental laws may pose special requirements; therefore you should contact your base environmental section for these concerns. For Air Force and MAJCOM forms, you will have to rely heavily on local procedures and your MAJCOM functional manager for guidance on the documentation requirements for your plant. This AFQTP focuses on the documentation required in AFI 36-1062, Electrical Power Plants and Generators.

1.2.2. Good record keeping is essential for effective equipment analysis. Base electrical power production personnel and maintenance engineers maintain and analyze the operation and maintenance records of power plants to ensure the mission receives reliable electrical support and that the equipment follows minimum life-cycle cost trends. Follow your major command policy for determining who gets distribution of power plant records, when they review the records, and how the reviewer provides feedback to base personnel. Consult administrative personnel on the procedures for the maintenance and disposal of records. Now, lets take a look at some of the different types of documentation involved in the operation and maintenance of Air Force power plants.

Notice. This AFQTP is *NOT* intended to replace the applicable technical references nor is it intended to replace hands-on training. It is to be used in conjunction with these for training purposes only.

1.2.2.1. AF Form 487: Emergency Generator Operating Log (Inspection and Testing). The AF Form 487 or another MAJCOM-approved form will be used for standby power plants, Real Property Installed Equipment (RPIE) generators, and Equipment Automated Inventory Data (EAID) generators requiring bi-hourly monitoring. Record the following information as a minimum:

1.2.2.1.1. Operating data.

1.2.2.1.2. Condition of lube oil (viscosity test).

1.2.2.1.3. Condition of plant and subsystems.

1.2.2.1.4. Deficiencies.

1.2.2.1.5. Corrective measures.

1.2.2.2. A ***custom log*** can be developed and used when the standard log is inadequate or not available. This custom log must be approved by your MAJCOM and a copy forwarded to HQ AFCESA/CESE identifying what improvements you made as a result of this local log.

1.2.3. Historical Records. An *AF Form 719*, Historical Record Diesel Electric Generators and System, should be maintained by the maintenance organization for each RPIE and EAID generator. Use it to show the date, the cumulative number of engine operating hours, a description of all maintenance and inspections, and parts replaced. When transferring a generator set from one organization to another, send the associated historical records with it. This will provide the gaining organization with the background information necessary to properly maintain their new asset.

1.2.4. Maintaining Forms and Records. Proper documentation and maintenance of generator operating forms and the generator logbook is your responsibility. The generator operating forms will remain with the generator set, under a protective cover, until the front of the form is completely filled. When starting a new form, make sure the maintenance actions that are “open” on the completed form get transferred to the new form. Only the “open” items need to be transferred. Safely store all completed generator operations forms; they will be included in the unit historical records.

The *generator logbook* is a permanent record. Care must be taken to ensure no damage occurs to this book. Normally, the same logbook is used until it has been completely filled. Once the book is completely filled, it will remain in the power production work center. The information found in this logbook may be needed at some future date when preparing an historical report or when determining future maintenance requirements. This is why it is stressed that all entries be accurate, legible, and as detailed as possible.

NOTE:
A wide range of generators and references was used to develop the following steps.

2. ***To perform this task, following these steps:***

Step 1: Perform the control panel inspection. The generator Control Panel houses all the necessary controls and instruments to operate the generator set. These controls and instruments also provide the operator with important information concerning proper operation of the generator set. Make a visual inspection of all Control Panel instrumentation when completing your During Operation Inspection. Primarily, you are checking to see that all gauges are indicating correctly. In order to check for correct indications you must first know the correct indication for each gauge. Following is a list of Control Panel instruments and the correct indication for each.

1.1. Voltmeter - 120/208 volts.

1.2. Frequency meter - 50Hz or 60Hz (depending on your particular operating conditions).

1.3. Load meter (kW meter) - can read anywhere between 1 to 100%. However, it should never exceed 100%.

1.4. Ammeter (Percent of Current meter) - can read anywhere between 1 to 100%. However, it should never exceed 100%.

1.5. Battery Charging Ammeter – green portion of scale.

1.6. Oil Pressure gauge:

1.6.1. MEP-004A - 20 to 60 psi.

1.6.2. MEP-005A - 20 to 55 psi.

1.6.3. MEP-007B - 40 to 60 psi.

1.6.4. MEP-009B - 40 to 60 psi.

1.7. Coolant Temperature gauge:

1.7.1. MEP-004A - 170 to 200 degrees Fahrenheit.

1.7.2. MEP-005A - 170 to 200 degrees Fahrenheit.

1.7.3. MEP-006A - 180 to 200 degrees Fahrenheit.

1.7.4. MEP-007B - 180 to 200 degrees Fahrenheit.

1.7.5. MEP-009B - 180 to 200 degrees Fahrenheit.

1.8. Fuel Level gauge - recommended fuel level be no less than one half of tank.

NOTE:
It always good to physically check the generator fluid levels and not to rely on the gauges.

1.9. Check the Fault Indicator Panel on generator models equipped with one, to ensure no fault lights are illuminated.

Step 2: Verify the Air Cleaner indicator light is not illuminated.

NOTE:
Your particular generator model may not have all of the instruments listed. You need only be concerned with the information that applies to your generator set.

Notice. This AFQTP is *NOT* intended to replace the applicable technical references nor is it intended to replace hands-on training. It is to be used in conjunction with these for training purposes only.

Step 3: Inspect fluid levels.

3.1. The importance of monitoring generator fluids and maintaining their proper levels was discussed in a previous module. One of the most important fluids to monitor is fuel. Remember; NEVER rely solely on the generator Fuel Level gauge to provide you with an accurate indication. Go to the fuel tank and visually look inside it. If you are using an auxiliary fuel supply, make sure you check the level at the auxiliary source.

3.2. On some generator models (MEP-004A through MEP-007B), you must check the engine oil level when the generator set is operating. To do this, simply remove the engine oil level dipstick, and read the side of the dipstick marked "RUN." The engine oil level should be at the "FULL" mark on the dipstick. Check the engine oil level at least every 8 hours of generator operation.

NOTE:

When using an auxiliary fuel source, the generator set tank is bypassed. Therefore, make sure you visually check the fuel level at the auxiliary fuel source. Don't be misled by the reading indicated on the Control Panel Fuel gauge. This gauge only indicates the level of the fuel in the generator set tank.

NOTE:

To ensure the correct engine oil level, make sure that the side of the dipstick marked "RUN" is in the up position. The underside of the dipstick is wiped clean as it is removed from the oil filler tube.

CAUTION:

ONLY THE GENERATOR MODELS MENTIONED ABOVE REQUIRE CHECKING OF THE OIL WHEN THE UNIT IS OPERATING. ATTEMPTING TO CHECK THE OIL LEVEL ON ANY OTHER GENERATOR MODEL WHEN IT IS OPERATING WILL RESULT IN OIL "SPURTING" OUT FROM THE OIL FILLER TUBE.

Step 4: Perform an overall visual inspection.

Step 5: Determine required documentation.

Step 6: Complete required operations records.

Step 7: Complete required maintenance records.

Step 8: Distribute power plant documentation.

Notice. This AFQTP is *NOT* intended to replace the applicable technical references nor is it intended to replace hands-on training. It is to be used in conjunction with these for training purposes only.

REVIEW QUESTIONS
FOR
PERFORM DURING OPERATION INSPECTION

QUESTION	ANSWER
1. Power plant documentation is standard for all power plants throughout the Air Force?	a. True. b. False.
2. Why is good record keeping essential to equipment analysis?	a. For reliable electrical support and show maintenance trends. b. Detect gradual changes that will signal engine deterioration. c. Eliminate the need for unscheduled maintenance. d. Both a and b.
3. What is the importance or reason for maintaining generator operations logs?	a. Record performance during operation, inspection, and testing. b. Determine the need for additional generators. c. Provide customer feedback. d. All of the above.
4. Which form is used for standby plants or RPIE and EAID generators requiring bi-hourly monitoring?	a. AF Form 731, Crankshaft Deflection Record. b. AF Form 1167, Daily Power Plant Operating Log. c. AF Form 487, Emergency Generator Operating Log. d. AF Form 734, Cylinder Liner and Ring Wear Record.
5. Which form should be maintained for each RPIE and EAID generator for the purpose of documenting engine hours and maintenance performed?	a. AF Form 719, Historical Record Diesel Electric Generators. b. AF Form 487, Emergency Generator Operating Log. c. AF Form 1167, Daily Power Plant Operating Log. d. AF Form 731, Crankshaft Deflection Record.

Notice. This AFQTP is *NOT* intended to replace the applicable technical references nor is it intended to replace hands-on training. It is to be used in conjunction with these for training purposes only.

PERFORM DURING OPERATION INSPECTION

PERFORMANCE CHECKLIST

INSTRUCTIONS:

The trainee must satisfactorily perform all parts of the task without assistance. Evaluate the trainee's performance using this checklist.

DID THE TRAINEE….?	YES	NO
1. Determine required documentation		
2. Complete required operations records		
3. Complete required maintenance records		
4. Distribute power plant documentation		
5. Perform the control panel inspection		
6. Inspect all the fluid levels		
7. Perform an overall visual inspection		

FEEDBACK: Trainer should provide both positive and/or negative feedback to the trainee immediately after the task is performed. This will ensure the issue is still fresh in the mind of both the trainee and trainer.

Notice. This AFQTP is *NOT* intended to replace the applicable technical references nor is it intended to replace hands-on training. It is to be used in conjunction with these for training purposes only.

MOBILE GENERATORS 200 KW OR LESS

PERFORM

MODULE 28 **AFQTP UNIT 1**

POST-OPERATIONAL INSPECTION (28.1.1.2.3.)

Notice. This AFQTP is *NOT* intended to replace the applicable technical references nor is it intended to replace hands-on training. It is to be used in conjunction with these for training purposes only.

POST-OPERATIONAL INSPECTION

Task Training Guide

STS Reference Number/Title:	28.1.1.2.3., Post-operational inspection (Perform).
Training References:	1. 35C2 series Technical Orders (TOs): 1.1. TO 35C2-3-445-1, *MEP-004A*, (Table 3-1). 1.2. TO 35C2-3-446-1, *MEP-005A*, (Table 3-1). 1.3. TO 35C2-3-444-1, *MEP-006A*, (Table 3-1). 1.4. TO 35C2-3-442-11, *MEP-007B*, (Table 3-2). 1.5. TO 35C2-3-443-11, *MEP-009B*, (Table 3-2). 2. Commercial Manuals. 3. National Fire Protection Agency (NFPA) Regulations 110, Table A-6-3-1. 4. Career Development Course (CDC) 3E052A Volume 1, Unit 6, Section 065, *Generator Operation* and 3E0X2B Volume 2, Unit 2, Section 204, *Generator Set Operation*. 5. AFI 32-1062, *Electrical Power Plants and Generators*. 6. AFI 32-1063, *Electric Power Systems.* 7. AFI 32-1064, *Electrical Safe Practices.* 8. Local Procedures. 9. AFQTP 3E0X2 Module 12, 1 Aug 02: *AFSC Specific Publications*.
Prerequisites:	1. **Possess as a minimum a 3E032 AFSC.** 2. **Review the following references:** 2.1. Review CDC 3E052A Volume 1, Unit 6, Section 065, and 3E0X2B, Volume 2, Unit 2, Section 204. 2.2. Applicable TOs, Commercial Manuals, and NFPA Regulations. 2.3. AFIs 32-1062, 32-1063, and 32-1064. 3. **Complete AFQTP 3E0X2 Modules 12, 1 Aug 02: *AFSC Specific Publications*.**
Equipment/Tools Required:	1. Computer to support AFQTP CD-ROMs. 2. Applicable technical references. 3. Generic generator set. 4. Personal safety equipment.
Learning Objective:	Given applicable technical references and local directives, perform generator post-operational inspection IAW prescribed procedures
Samples of Behavior:	1. Trainee will be able to perform a post-operational inspection to include: 1.1. Drain condensation/sediment from fuel system components. 1.2. Service generator fluid systems. 1.3. Service generator set batteries. 1.4. Making an overall inspection of the generator.
Notes:	
1. To successfully complete this element follow the steps outlined in the applicable technical manual exactly--no exceptions. 2. Any safety violation is an automatic failure.	

Notice. This AFQTP is *NOT* intended to replace the applicable technical references nor is it intended to replace hands-on training. It is to be used in conjunction with these for training purposes only.

PERFORM POST-OPERATIONAL INSPECTION

1. Background: After each period of generator operation, a post-operational inspection is performed once the set has been shut off and allowed to cool. The purpose of the post-operational inspection is to service the generator set and make it ready for future operation. The post-operational inspection is similar to the pre-operational inspection. Both inspections are to ensure the generator set is ready for operation. You may wonder why it is necessary to do two inspections involving basically the same things. Suppose that you have just come on shift and need to change over the generator sets. That is an easy task, right? Well, if the person before you forgot to perform a post-operational inspection it may not be so easy. Instead of performing a relatively quick and simple pre-operational check, you may have to spend time adding oil, coolant, or fuel. A post-operational inspection would have prevented this. The difference between the two inspections is that during a post-operational inspection, the unit is inspected for damage and serviced ensuring its readiness for immediate operation, whereas a pre-operational inspection just verifies everything is ready to go. At this time, review the requirements for a post-operational inspection in the applicable TO.

In addition to the inspection items shown in the applicable TOs, there are other items you may be required to inspect. The TO lists only minimum requirements but, often, local operating instructions will include additional requirements.

> **NOTE:**
> A wide range of generators and references was used to develop the following steps.

2. ***To perform this task, following these steps:***

Step1: Drain Sediment/Condensation:

1.1. As with a pre-operational inspection, you are required to drain all sediment and condensation from the fuel system. The locations from which sediment/condensation are drained varies between generator models.

1.2. Chances are you will **NOT** notice an appreciable amount of sediment/condensation during a post-operational inspection. This is because condensation normally does not form when the generator set is operating. If you recall, condensation forms when the ambient temperature changes from hot to cold. Additionally, sediment that does form has not had sufficient time to settle at the bottom of the fuel system.

Step 2: Generator Fluid Levels:

2.1. <u>Check Oil Supply</u>. Maintaining an adequate engine oil supply is critical to the continued operation of the generator set. Whenever the generator set is operated, some oil consumption is expected. This oil is lost through evaporation, while some is forced out through the exhaust. Additionally, oil is lost as a result of small oil leaks. Before checking the engine oil level, make sure the generator set has cooled. This allows the oil to drain back into the oil sump and permits a more accurate reading. The correct reading should be at the “full” mark. If it is necessary to add oil, do so in small amounts to avoid over filling.

Notice. This AFQTP is *<u>NOT</u>* intended to replace the applicable technical references nor is it intended to replace hands-on training. It is to be used in conjunction with these for training purposes only.

2.2. Check Fuel Level. Most of the technical orders require you to ensure the fuel tank is full after each operation. However, this is not always the procedure when deployed. When deployed, generators usually draw fuel from an auxiliary fuel source, such as a 55-gallon fuel drum or an A1B (fuel trailer). A refueling schedule is usually set up with the motor pool for refueling these auxiliary fuel sources. The fueling schedule should ensure there is always an adequate fuel supply on hand. You should remember the golden rule of any power production person is "NEVER RUN OUT OF FUEL." This is the first CARDINAL SIN in Power Production!!!

2.3. Check the Coolant Level. Once the generator set has completely cooled down, slowly open the radiator cap. The correct level is two inches below the top of the filler neck tube. Replenish the coolant level with a 60/40 mixture of water and antifreeze.

CAUTION:

WHEN UNDER FIELD CONDITIONS (DEPLOYED), YOU MAY NOT HAVE ACCESS TO BOTH WATER AND ANTIFREEZE. IN THIS INSTANCE, USE THE ONE THAT IS AVAILABLE AS LONG AS YOU DO NOT HAVE TO REPLENISH LARGE AMOUNTS.

Step 3: Battery Inspection. After the generator set has been shut down, you should check the generator batteries for proper electrolyte level, tightness of connections, and overall cleanliness. If a good pre-operational inspection was performed, you should find few problems with the batteries. Normally, the only thing you should have to do to the batteries is replenish the electrolyte lost through evaporation during generator operation. Always make sure the electrolyte is at the correct level. Over a period of time, a low electrolyte level will reduce the life span of the battery. Don't forget the appropriate safety gear when working on the batteries.

Step 4: Overall Inspection. Visually inspect the generator set noting any discrepancies. Some things to look for are: loose or missing hardware, fluid leaks, loose electrical connections, dirty air cleaner, and overall cleanliness of the unit. Local operating procedures will identify any additional items that must be inspected.

Step 5: Document. Document discrepancies noted during the post-operational inspection, that you couldn't quickly correct, on the appropriate generator operating form and annotated on the back of the generator operating form. In addition let your supervisor know that the generator has a discrepancies.

Notice. This AFQTP is *NOT* intended to replace the applicable technical references nor is it intended to replace hands-on training. It is to be used in conjunction with these for training purposes only.

REVIEW QUESTIONS
FOR
POST-OPERATIONAL INSPECTION

QUESTION	ANSWER
1. When is a post-operational inspection performed?	a. Once the set has been shut off and allowed to cool. b. Immediately after Shut-down. c. Before Starting the generator. d. Supervisor Directed.
2. What is the purpose of the post-operational inspection?	a. Make it ready for the future. b. It is to service the generator set and make it ready for future operation. c. To repair any damage cause the run. d. To service the generator set.
3. When does condensation not normally form in a generator set?	a. When the generator set is shut down. b. When the generator is full of fuel. c. When the generator set is operating. d. When the generator set has no fuel.
4. Why should you be cautious on generator models equipped with both a "run" and "stop" sided dipstick?	a. To avoid over filling system with oil. b. To ensure proper level of fuel level. c. There is no difference in the marks. d. None of the above.
5. What is the golden rule of any power production person?	a. “NEVER RUN OUT OF FUEL.” b. “NEVER LOST POWER.” c. “DON’T BE LATE.” d. “ANY TIME ANY PLACE.”
6. When do you check the coolant?	a. Once the generator set has completely cooled down. b. Immediately after Shut-down. c. Before Starting the generator. d. Supervisor Directed.
7. Over a period of time what will reduce the life span of the battery?	a. A low electrolyte level. b. An extended generator run condition. c. A generator run that is too short. d. Continuously cranking generator.
8. What should you do if you find discrepancies after performing a post-operational inspection?	a. Annotate in the logbook only. b. Tell your supervisor only. c. Annotate on the back of the AF Form 487 only. d. All of the above.

Notice. This AFQTP is *NOT* intended to replace the applicable technical references nor is it intended to replace hands-on training. It is to be used in conjunction with these for training purposes only.

PERFORM POST-OPERATIONAL INSPECTION

PERFORMANCE CHECKLIST

INSTRUCTIONS:

The trainee must satisfactorily perform all parts of the task without assistance. Evaluate the trainee's performance using this checklist.

DID THE TRAINEE….?	YES	NO
1. Drain sediment and condensation from the system		
2. Check the generator fluid levels: 2.1. Oil Supply 2.2. Fuel Level 2.3. Coolant Level		
3. Perform a battery Inspection		
4. Perform overall inspection		
5. Document this maintenance action		
6. Properly report and report discrepancies		

FEEDBACK: Trainer should provide both positive and/or negative feedback to the trainee immediately after the task is performed. This will ensure the issue is still fresh in the mind of both the trainee and trainer.

Notice. This AFQTP is *NOT* intended to replace the applicable technical references nor is it intended to replace hands-on training. It is to be used in conjunction with these for training purposes only.

MOBILE GENERATORS 200 KW OR LESS

PERFORM

MODULE 28 **AFQTP UNIT 1**

SINGLE UNIT OPERATION (28.1.1.2.5.)

Notice. This AFQTP is *NOT* intended to replace the applicable technical references nor is it intended to replace hands-on training. It is to be used in conjunction with these for training purposes only.

PERFORM SINGLE UNIT OPERATION

Task Training Guide

STS Reference Number/Title:	28.1.1.2.5., Single unit operation (Perform).
Training References:	1. 35C2 series Technical Orders (TOs): 1.1. TO 35C2-3-445-1, *MEP-004A*, (Table 3-1). 1.2. TO 35C2-3-446-1, *MEP-005A*, (Table 3-1). 1.3. TO 35C2-3-444-1, *MEP-006A*, (Table 3-1). 1.4. TO 35C2-3-442-11, *MEP-007B*, (Table 3-2). 1.5. TO 35C2-3-443-11, *MEP-009B*, (Table 3-2). 2. Commercial Manuals. 3. National Fire Protection Agency (NFPA) Regulations 110, Table A-6-3-1. 4. Career Development Course (CDC) 3E052A Volume 1, Unit 6, Section 065, *Generator Operation* and 3E0X2B Volume 2, Unit 2, Section 204, *Generator Set Operation*. 5. AFI 32-1062, *Electrical Power Plants and Generators*. 6. AFI 32-1063, *Electric Power Systems.* 7. AFI 32-1064, *Electrical Safe Practices.* 8. Local Procedures. 9. AFQTP 3E0X2 Module 12, 1 Aug 02: *AFSC Specific Publications*.
Prerequisites:	1. **Possess as a minimum a 3E032 AFSC.** 2. **Review the following references:** 2.1. Review CDC 3E052A Volume 1, Unit 6, Section 065, and 3E0X2B, Volume 2, Unit 2, Section 204. 2.2. Applicable TOs, Commercial Manuals, and NFPA Regulations. 2.3. AFI 32-1062, 32-1063, and 32-1064. 3. **Complete AFQTP 3E0X2 Modules 12, 1 Aug 02: *AFSC Specific Publications*.**
Equipment/Tools Required:	1. Computer to support AFQTP CD-ROMs. 2. Applicable technical references. 3. Generic generator set. 4. Personal safety equipment.
Learning Objective:	Given applicable technical references and local directives, perform generator single unit operation inspection IAW prescribed procedures.
Samples of Behavior:	Trainee will be able to perform single unit operation.
Notes:	
1. To successfully complete this element follow the steps outlined in the applicable technical manual exactly--no exceptions. 2. Any safety violation is an automatic failure.	

Notice. This AFQTP is *NOT* intended to replace the applicable technical references nor is it intended to replace hands-on training. It is to be used in conjunction with these for training purposes only.

PERFORM SINGLE UNIT OPERATION

1. Background: Single unit operation is fundamental stepping block prior to operating the units in parallel. However, you should never start a unit until a pre-operation inspection is done in accordance with the applicable TO, Commercial manual and local references. Because this is the first and most important step and should never be skipped. This pre-start inspection should be preformed on each primary and secondary stand-by unit.

> **NOTE:**
> A wide range of generators and references was used to develop the following steps.

2. ***To perform this task, following these steps:***

Step 1: Start generator set.

1.1. Depress the DC Control Circuit Breaker.

1.2. Hold Start-Stop-Run switch to **START** position until engine starts and oil pressure increases to 25 psi, AC Volt meter indicates voltage, and the Low Oil Pressure Indicator extinguishes then release Start-Stop-Run switch to ***run*** position.

Step 2: Ensure Amps-Volts selector switch is on. Rotate the Voltage Adjust control to obtain the required voltage as indicated on the AC Volt meter.

Step 3: Adjust for rated frequency.

3.1. Depress the Locking Button and slide engine manual speed control in or out to obtain the approximate rated frequency.

3.2. Then release the Locking Button and rotate the throttle knob clockwise or counterclockwise to obtain the precise frequency desired.

> **HINT:**
> Operate engine at least five minutes for warm-up.

Step 4: Apply the load. Apply load by holding Load Circuit Breaker switch to the close position until the Closed Circuit Breaker indicator light illuminates.

> **NOTE TO TRAINER:**
> You must inform your trainee your specific configuration to apply load to the facility (Double-throw, Automatic transfer panel, etc.).

Step 5: Observe the Kilowatt meter. If more than rated KW is indicated reduce the load-by-load shedding. If the load is less than 25% of generator load rating, you should use a smaller generator.

.

Notice. This AFQTP is *NOT* intended to replace the applicable technical references nor is it intended to replace hands-on training. It is to be used in conjunction with these for training purposes only.

Step 6: Observe the Percent Rated Current meter. Rotate amps-volts selector switch to each phase position and monitor Percent Rated Current Meter. If more than rated load is indicated for any position, reduce or balance the load.

Step 7: Monitor engine performance.

7.1. Rotate amps-volts selector switch to each phase position and monitor Percent Rated Current Meter. If more than rated load is indicated for any position, reduce or balance the load.

7.2. Monitor engine and generator indicators and performance to ensure continued operation every hour.

7.3. Use an approved Air Force form to conduct the inspection and document your findings on this form. As a minimum, check and document the following:

7.3.1. Check lube oil level and add as required.

7.3.2. Inspect exhaust extension (for generator sets operating indoors) for tightness, and leakage at seams and point of coupling.

7.3.3. Check the fault indicator panel using the test switch.

7.3.4. Check the control cubicle panel and ensure the battery charging ammeter coolant temperature gauge (180 to 200 degrees), oil pressure gauge (40 to 60 psi), volts AC meter (120/208 or 240/416 volts AC), percent rated current meter (less than 100 percent), and the frequency meter (50 or 60 hertz) are all within operating range.

Step 8: Shutdown Generator.

8.1. Remove the load from the generator by placing the circuit breaker switch to the open position.

8.2. Reduce frequency to 57 Hz.

8.3. Turn voltage regulator fully counter clockwise.

8.4. Allow the generator to operate with no-load for three to five minutes to cool the engine down.

8.5. Place the Start-Run-Stop switch to the stop position.

8.6. Perform post-operational inspection when engine has cooled to ambient temperature:

8.6.1. Check and adjust the fluid levels (i.e. oil, water, fuel, and electrolyte).

8.6.2. Check, adjust, or replace the v-belts as applicable.

8.6.3. Complete the required operational and historical documentation.

8.6.4. Secure unit access doors.

Notice. This AFQTP is *NOT* intended to replace the applicable technical references nor is it intended to replace hands-on training. It is to be used in conjunction with these for training purposes only.

REVIEW QUESTIONS
FOR
PERFORM SINGLE UNIT OPERATION

QUESTION	ANSWER
1. What is the fundamental stepping block prior to operating the units in parallel?	a. Single unit operation. b. Understanding how the generator works. c. Parallel unit operation. d. Starting Procedures.
2. You should never start a unit:	a. until a pre-operation inspection is done. b. until a post-operation inspection is done. c. authorization. d. until you clear the area.
3. How long should let the generator run before applying load?	a. 1 minute. b. 5 minutes. c. 10 minutes. d. 15 minutes.
4. How do you apply load to the tactical generator?	a. Close the circuit breaker. b. Switch the ATP. c. It's automatic. d. Close the load contactor.
5. How do know that the load contactor is closed?	a. Circuit Breaker indicator light illuminates. b. Load contactor indicator light illuminates. c. The Panel Lights illuminates. d. There is none indication.
6. How do remove load from the generator?	a. Just shut down the generator. b. Pull the DC circuit breaker. c. Open the load contactor. d. Switch the ATP.

Notice. This AFQTP is *NOT* intended to replace the applicable technical references nor is it intended to replace hands-on training. It is to be used in conjunction with these for training purposes only.

PERFORM SINGLE UNIT OPERATION

PERFORMANCE CHECKLIST

INSTRUCTIONS:

The trainee must satisfactorily perform all parts of the task without assistance. Evaluate the trainee's performance using this checklist.

DID THE TRAINEE….?	YES	NO
1. Perform a pre-operational inspection		
2. Started the generator set		
3. Ensure the amps-volts selector switch was on		
4. Adjust unit for rated frequency		
5. Apply load to the generator		
6. Observe kilowatts meter		
7. Observe percent rated current meter		
8. Monitor engine performance		
9. Document all actions on the AF Form 487		

FEEDBACK: Trainer should provide both positive and/or negative feedback to the trainee immediately after the task is performed. This will ensure the issue is still fresh in the mind of both the trainee and trainer.

Notice. This AFQTP is *NOT* intended to replace the applicable technical references nor is it intended to replace hands-on training. It is to be used in conjunction with these for training purposes only.

MOBILE GENERATORS 200 KW OR LESS

PERFORM

MODULE 28 **AFQTP UNIT 1**

PARALLEL UNIT OPERATION (28.1.1.2.6.)

Notice. This AFQTP is *NOT* intended to replace the applicable technical references nor is it intended to replace hands-on training. It is to be used in conjunction with these for training purposes only.

PERFORM PARALLEL UNIT OPERATION

Task Training Guide

STS Reference Number/Title:	28.1.1.2.6., Parallel unit operation (Perform).
Training References:	1. 35C2 series Technical Orders (TOs): 1.1. TO 35C2-3-445-1, *MEP-004A*, (Table 3-1). 1.2. TO 35C2-3-446-1, *MEP-005A*, (Table 3-1). 1.3. TO 35C2-3-444-1, *MEP-006A*, (Table 3-1). 1.4. TO 35C2-3-442-11, *MEP-007B*, (Table 3-2). 1.5. TO 35C2-3-443-11, *MEP-009B*, (Table 3-2). 2. Commercial Manuals. 3. National Fire Protection Agency (NFPA) Regulations 110, Table A-6-3-1. 4. Career Development Course (CDC) 3E052A Volume 1, Unit 6, Section 065, *Generator Operation* and 3E0X2B Volume 2, Unit 2, Section 204, *Generator Set Operation*. 5. AFI 32-1062, *Electrical Power Plants and Generators*. 6. AFI 32-1063, *Electric Power Systems.* 7. AFI 32-1064, *Electrical Safe Practices.* 8. Local Procedures. 9. AFQTP 3E0X2 Module 12, 1 Aug 02: *AFSC Specific Publications*.
Prerequisites:	1. **Possess as a minimum a 3E032 AFSC.** 2. **Review the following references:** 2.1. Review CDC 3E052A Volume 1, Unit 6, Section 065, and 3E0X2B, Volume 2, Unit 2, Section 204. 2.2. Applicable TOs, Commercial Manuals, and NFPA Regulations. 2.3. AFI 32-1062, 32-1063, and 32-1064. 3. **Complete AFQTP 3E0X2 Modules 12, 1 Aug 02: *AFSC Specific Publications*.**
Equipment/Tools Required:	1. Computer to support AFQTP CD-ROMs. 2. Applicable technical references. 3. Generic generator set. 4. Personal safety equipment.
Learning Objective:	Given applicable technical references and local directives, perform generator parallel unit operation inspection IAW prescribed procedures.
Samples of Behavior:	Trainee will be able to perform parallel unit operation.
Notes:	
1. To successfully complete this element follow the steps outlined in the applicable technical manual exactly--no exceptions. 2. Any safety violation is an automatic failure.	

Notice. This AFQTP is *NOT* intended to replace the applicable technical references nor is it intended to replace hands-on training. It is to be used in conjunction with these for training purposes only.

PERFORM PARALLEL UNIT OPERATION

1. Background: Parallel operation is defined as operating two or more AC generators electrically-magnetically in-connected together. The process of paralleling is synonymous with the word synchronizing; both words basically mean the same. Parallel is defined: Readily compared, companion. To show something that is equal. To place something so as it is to be parallel in direction. Synchronize is defined: To happen at the same time. We will use the word parallel. The ability to parallel generators is what separates the true power personnel from anyone off the street who can start a car. We will be discussing why it is necessary to operate in parallel, and how to set-up for parallel operations.

1.1. During your tour as a power production technician you will come under a multitude of operational situations and the more you know about your job and your equipment's capabilities, the quicker you will be able to accomplish the task before you. You may be assign to a communications type unit, were you can't shutdown the generator to perform maintenance. You will be required to parallel an additional generator with the on-line generator, to prevent an electrical power interruption. This is just one of many situations you may find yourself in, the question is, are you capable of performing this task? Now, the question is, how to set-up for parallel operations?

1.2. Since the word parallel means companion, the first step is to ensure both generators are electrically the same the same (Frequency, Phase rotation, phase relationship, and voltage). Figure 1 is a common set-up for generator parallel operations; the box between the generators is typically called a parallel box. The parallel box has two in-puts with isolation breakers and one out-put source (terminal lugs or an actual cannon plug) to the load. The parallel cables are installed to facilitate governor operations between the two units. We have covered, why you may need to operate in parallel and how to set-up your equipment, it's time to start the performance portion.

Notice. This AFQTP is *NOT* intended to replace the applicable technical references nor is it intended to replace hands-on training. It is to be used in conjunction with these for training purposes only.

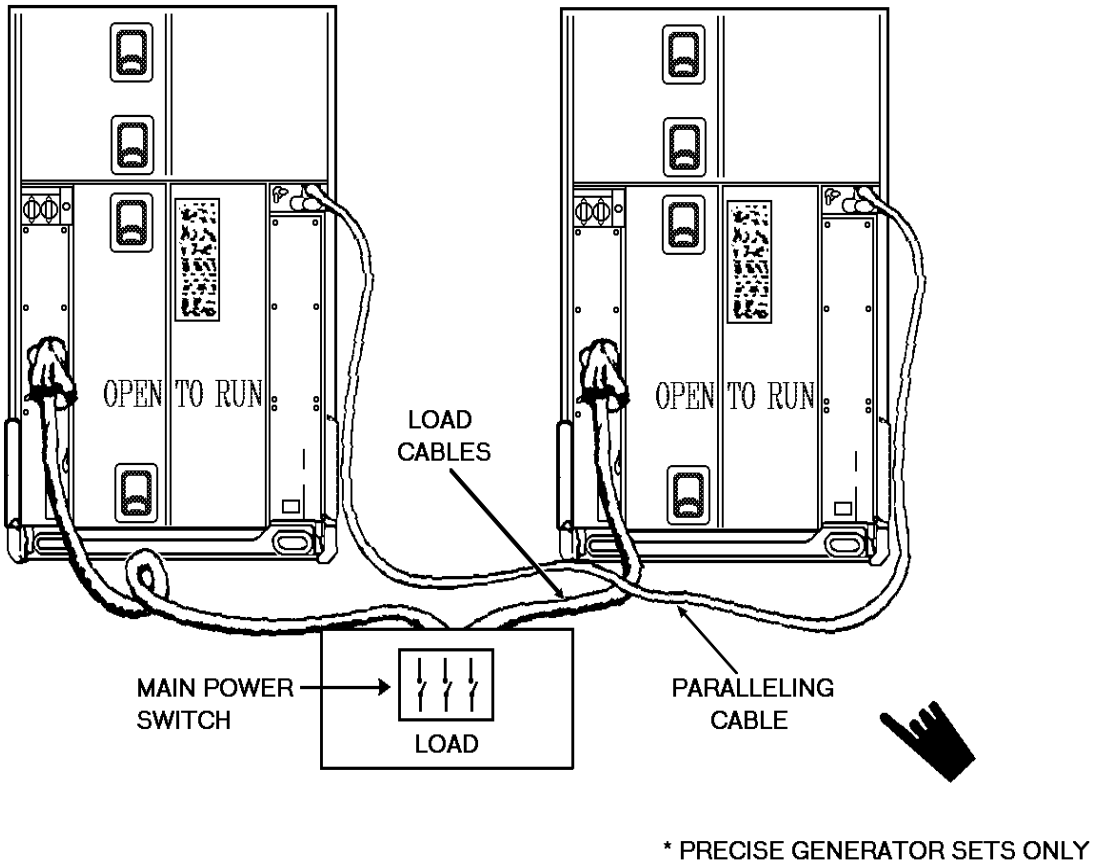

Figure 1. MEP Series Generators in Parallel.

SAFETY:

IF THERE IS NO PARALLEL BOX YOU MAY BE REQUIRED TO CONNECT THE OUTPUT CABLES TO A COMMON BUS SUCH AS THE LOAD TERMINAL BOARD. THE LOAD TERMINAL BOARD WILL ALWAYS BE ENERGIZED AS LONG AS ONE OF IS OPERATING. THEREFORE THE LOAD TERMINAL BOARD ON THE UNITS NOT ON-LINE ARE HOT AND SHOULD NOT BE WORKED ON OR AROUND WITHOUT TAKING PROPER PRECAUTIONS.

NOTE:

A wide range of generators and references was used to develop the following steps.

2. ***To perform this task, following these steps:***

Step 1: Label the units. One unit will be called the running unit and the other unit will be called the incoming unit. The running unit is the unit on-line and the incoming unit will be the unit that is to be placed in parallel operation with the running unit.

Step 2: Start the running unit.

2.1. Start the running unit and adjust voltage and frequency to operating range.

2.2. Close the main circuit breaker and allow it to pickup load.

2.3. Observe all instruments for normal readings with emphasis on kilowatts (percent power), frequency, voltage, and amperage (on all three phases).

2.4. Place operation switch to the parallel operation position. (Optional)

Step 3: Start the incoming unit.

3.1. Start the incoming unit and adjust voltage and frequency.

3.2. Set operation switch to parallel operation position, synchronizing lights will illuminate going from bright to dark.

Step 4: Bring incoming unit on line.

4.1. Adjust the engine speed of the incoming unit to match that of the running unit, while observing the synchronizing lights. Adjust until synchronize lights are blinking slowly.

4.2. Adjust voltage on the incoming unit to match running unit.

4.3. Close load contactor when the synchronizing lights are dark, and increase engine torque (fuel) to pick-up load.

NOTE:

Phase sequence has to do with the order in which the generator windings are connected. If phase sequence is not correct, the synchronizing lights will not blink simultaneously on and off.

Step 5: Check both units for desired operation. Ensure both units have sufficient load as to not created a motorize situation. Adjust as desired.

SAFETY:

SHOULD EITHER GENERATOR SET LOSE SPEED, “BUCK”, OR “SHUDDER”, WHEN THE INCOMING UNIT IS CONNECTED TO THE DISTRIBUTION FEEDER LINES, IMMEDIATELY OPEN THE MAIN CIRCUIT BREAKER OF THE INCOMING UNIT TO OPEN AND RECHECK PARALLEL SET-UP PROCEDURES.

Step 6: Shut down the unit.

6.1. Transfer the load from one unit to the other unit by reducing the fuel on one unit, opening it’s main circuit breaker before shutting down the unit, allowing the engine to operate with no load for about five minutes.

6.2. Perform post-operational inspection, and document actions.

Notice. This AFQTP is *NOT* intended to replace the applicable technical references nor is it intended to replace hands-on training. It is to be used in conjunction with these for training purposes only.

REVIEW QUESTIONS
FOR
PERFORM PARALLEL UNIT OPERATION

QUESTION	ANSWER
1. What are the four factors involved in paralleling generators?	a. Frequency, voltage, phase sequence, and amperage. b. Frequency, voltage, phase sequence and phase relationship. c. Frequency, voltage, phase sequence, and kilowatts. d. Frequency, voltage, amperage, and kilowatts.
2. How are the two parallel units identified?	a. Running and incoming. b. Incoming and outgoing. c. Faster and slower. d. Stopped and started.
3. When is the load circuit breaker closed on the incoming unit?	a. The paralleling lights alternately flash. b. The paralleling lights illuminate. c. The paralleling lights extinguish. d. The running unit reaches 75% load.
4. How many minutes do you allow the engine to cool down before shutting down the unit?	a. 10. b. 15. c. 5. d. 2.

Notice. This AFQTP is *NOT* intended to replace the applicable technical references nor is it intended to replace hands-on training. It is to be used in conjunction with these for training purposes only.

PERFORM PARALLEL UNIT OPERATION

PERFORMANCE CHECKLIST

INSTRUCTIONS:

The trainee must satisfactorily perform all parts of the task without assistance. Evaluate the trainee's performance using this checklist.

DID THE TRAINEE….?	YES	NO
1. Label the units		
2. Start the running unit		
3. Start the incoming unit		
4. Place incoming unit on line		
5. Check on both units		
6. Shut down the units		

FEEDBACK: Trainer should provide both positive and/or negative feedback to the trainee immediately after the task is performed. This will ensure the issue is still fresh in the mind of both the trainee and trainer.

Notice. This AFQTP is *NOT* intended to replace the applicable technical references nor is it intended to replace hands-on training. It is to be used in conjunction with these for training purposes only.

MOBILE EMERGENCY POWER (MEP) -012 GENERATORS

INSTALLATION

MODULE 28 **AFQTP UNIT 1**

POSITION (28.1.2.2.2.)
GROUND (28.1.2.2.3.)

Notice. This AFQTP is *NOT* intended to replace the applicable technical references nor is it intended to replace hands-on training. It is to be used in conjunction with these for training purposes only.

POSITION/GROUND MEP-12 GENERATORS

Task Training Guide

STS Reference Number/Title:	28.1.2.2.2., Position MEP-12 generators (Installation). 28.1.2.2.3., Ground MEP-12 generators (Installation).
Training References:	1. Technical Orders (TO) 35C2-3-474-1, *Generator Set, Diesel Engine Driven, Wheel Mounted 750 KW.* 2. Career Development Course (CDC) 3E052A Volume 1, Unit 6-1, Section 061, *Bare Base Electrical Distribution System Equipment.* 3. Video # 613208, *MEP-12A Generator Operation Part 1.* 4. Video # 613190*, MEP-12A Generator Operation Part 2.* 5. Video # 613196, *MEP-12A Generator Plant Operation.* 6. CD-ROM Air Force Qualification Training Package (AFQTP) 3E0X2 Electrical Power Production, Version 1.0, Nov 97: *750 Kilowatt Generator (MEP-12).* 7. AFQTP 3E0X2 Module 16, 1 Aug 02: *Generator Set Grounding Fundamentals*. 8. AFQTP 3E0X2 Module 12, 1 Aug 02: *AFSC Specific Publications*.
Prerequisites:	1. **Possess as a minimum a 3E032 AFSC.** 2. **Review the following references:** 2.1. Review CDC 3E052A Volume 1, Unit 6-1, Section 06. 2.2. TO 35C2-3-474-1. 2.3. Videos # 613208, 613190, and 613196. 3. **Complete the following:** 3.1. AFQTP 3E0X2 Modules 12 and 16. 3.2. CD-ROM AFQTP Electrical Power Production, Version 1.0, Nov 97: *750 Kilowatt Generator (MEP-12).*
Equipment/Tools Required:	1. Computer to support AFQTP CD-ROMs. 2. Applicable technical references. 3. 750 KW generator(s). 4. Personal safety equipment. 5. Ground rods.
Learning Objective:	Given applicable technical references, position and ground 750 KW generator(s) IAW prescribed procedures.
Samples of Behavior:	Trainee will be able to position and ground 750 KW generator(s).
Notes:	
1. To successfully complete this element follow the steps outlined in the applicable technical manual exactly--no exceptions. 2. Any safety violation is an automatic failure.	

Notice. This AFQTP is *NOT* intended to replace the applicable technical references nor is it intended to replace hands-on training. It is to be used in conjunction with these for training purposes only.

POSITION/GROUND MEP-12 GENERATORS

1. Background: Positioning of the generator(s) is essential for proper operation. Wind-blown hot air from one engine-generator set can raise the operating ambient air temperature for another nearby engine-generator set. This higher temperature can cause engine overheating, reduce time between failures, and may require further derating of generator output.

1.1. Distribution system grounds are very important. They allow fuses and other system safety components to operate properly. The most elaborate grounding system you can design may prove ineffective unless the connection of the system to earth is adequate and has a sufficiently low resistance. For safety reasons, electric power systems and equipment are intentionally grounded so that insulation failure results in operation of protective devices to de-energize circuits, thus reducing risk to personnel. The word grounding is used commonly in electric power system work to cover both system grounding and equipment grounding; however, the distinction between system and equipment grounding should be recognized.

1.2. A system ground is a connection to ground from one of the conductors of an electric circuit, normally the neutral conductor. The purpose of electrical system grounds is to stabilize voltage to ground and give a low impedance path for fault current. Equipment grounding involves interconnecting and connecting to earth all noncurrent carrying metal parts of an electrical wiring system and equipment connected to the system. The equipment ground is connected to an electrical system ground (neutral) only at the service entrance of a building and should not exceed 25 ohms to ground. The purpose of grounding equipment is to ensure personnel safety, by reducing any charge in an equipment item to near zero volts with respect to ground, without causing a fire or explosive hazard, until the circuit protective device clears the fault.

2. Complete the following AFQTPs:

2.1. AFQTP 3E0X2 Module 12, 1 Aug 02: *AFSC Specific Publications*.

2.2. AFQTP 3E0X2 Module 16, 1 Aug 02: *Generator Set Grounding Fundamentals. Upon completion of the above-mentioned paper-base module will meet all requirements for grounding.*

2.3. CD-ROM AFQTP 3E0X2 Electrical Power Production, Version 1.0, Nov 97: *750 Kilowatt (KW) Generator (MEP-12)* for detailed instruction on the positioning and grounding of the 750KW generator. ***After completing the CD-ROM AFQTP see your Unit Education and Training Manager to take the <u>mandatory</u> CerTest # 8024, 750 QTP, Lesson 2. Trainee must score at least 80% to meet the minimum completion requirements for diamond tasks.***

NOTE:
The review questions for this material are in the above-mentioned CD-ROM.

Notice. This AFQTP is *<u>NOT</u>* intended to replace the applicable technical references nor is it intended to replace hands-on training. It is to be used in conjunction with these for training purposes only.

3. If the equipment is available, then perform the following steps:

3.1. ***For positioning of the 750 KW generator, follow these steps:***

Step 1: Locate TO 35C2-3-474-1: ***Generator Set, Diesel Engine Driven, Wheel Mounted 750 KW*****.**

Step 2: Position generator IAW TO 35C2-2-474-1, Chapter 4, Section 1, Paragraph 4-3.1.

3.2. ***For grounding of the 750 KW generator, follow these steps:***

Step 1: Locate TO 35C2-3-474-1: ***Generator Set, Diesel Engine Driven, Wheel Mounted 750 KW*****.**

Step 2: Ground generator IAW TO 35C2-2-474-1, Chapter 4, Section 1, Paragraph 4-3.2.

Notice. This AFQTP is *NOT* intended to replace the applicable technical references nor is it intended to replace hands-on training. It is to be used in conjunction with these for training purposes only.

POSITION/GROUND MEP-12 GENERATORS

PERFORMANCE CHECKLIST

INSTRUCTIONS:

The trainee must satisfactorily perform all parts of the task without assistance. Evaluate the trainee's performance using this checklist.

DID THE TRAINEE….?	YES	NO
Position		
1. Position the generator set at a minimum clearance of 5 feet (1.5 meters) on all four sides to allow for adequate air supply to the unit and access for maintenance		
2. Indoor siting: 2.1. Ensure the floor could support the generator set (25, 373 pounds (11.509 kg)) 2.2. Install exhaust piping for ventilation of the exhaust 2.3. Ensure that a maximum supply of fresh air reach the unit		
3. Outdoor siting: 3.1. Ensure that the ground was not to soft 3.2. Ensure that the ground surface is level (within 5 degrees) 3.3. Ensure that the radiator end is facing with (not against) prevailing winds		
4. Use protective clothing and equipment		
5. Follow all safety procedures		
Ground		
1. Secure one end of ground cable to a slotted ground stud on generator set		
2. Place ground cable through slot of ground stud and tighten nut		
3. Drive ground rods into ground until rods protrude six inches (15 cm) above surface		
4. Secure other end of round cable to ground rods		
5. Connect clamps and ground cable to exposed ground rods and secure by tightening nuts		
6. Use the proper size wire		
7. Test the ground		
8. Use protective clothing and equipment		
9. Follow all safety procedures		

FEEDBACK: Trainer should provide both positive and/or negative feedback to the trainee immediately after the task is performed. This will ensure the issue is still fresh in the mind of both the trainee and trainer.

Notice. This AFQTP is *NOT* intended to replace the applicable technical references nor is it intended to replace hands-on training. It is to be used in conjunction with these for training purposes only.

MEP-012 GENERATORS

OPERATE

MODULE 28 **AFQTP UNIT 1**

CONDUCT PRE-START PROCEDURES (28.1.2.6.1.)

Notice. This AFQTP is *NOT* intended to replace the applicable technical references nor is it intended to replace hands-on training. It is to be used in conjunction with these for training purposes only.

CONDUCT PRE-START PROCEDURES

Task Training Guide

STS Reference Number/Title:	28.1.2.6.1., Conduct pre-start procedures (Operate).
Training References:	1. Technical Orders (TO) 35C2-3-474-1, *Generator Set, Diesel Engine Driven, Wheel Mounted 750 KW.* 2. Career Development Course (CDC) 3E052A Volume 1, Unit 6-1, Section 061, *Bare Base Electrical Distribution System Equipment.* 3. Video # 613208, *MEP-12A Generator Operation Part 1.* 4. Video # 613190*, MEP-12A Generator Operation Part 2.* 5. Video # 613196, *MEP-12A Generator Plant Operation.* 6. CD-ROM Air Force Qualification Training Package (AFQTP) 3E0X2 Electrical Power Production, Version 1.0, Nov 97: *750 Kilowatt Generator (MEP-12).* 7. AFQTP 3E0X2 Module 16, 1 Aug 02: *Generator Set Grounding Fundamentals*. 8. AFQTP 3E0X2 Module 12, 1 Aug 02: *AFSC Specific Publications*.
Prerequisites:	1. **Possess as a minimum a 3E032 AFSC.** 2. **Review the following references:** 2.1. Review CDC 3E052A Volume 1, Unit 6-1, Section 061. 2.2. TO 35C2-3-474-1. 2.3. Videos # 613208, 613190, and 613196. 3. **Complete the following:** 3.1. AFQTP 3E0X2 Modules 12 and 16. 3.2. CD-ROM AFQTP Electrical Power Production, Version 1.0, Nov 97: *750 Kilowatt Generator (MEP-12).*
Equipment/Tools Required:	1. Computer to support AFQTP CD-ROMs. 2. Applicable technical references. 3. 750 KW generator(s). 4. Personal safety equipment. 5. General tool kit.
Learning Objective:	Given applicable technical references, conduct pre-start procedures for 750 KW generator(s) IAW prescribed procedures.
Samples of Behavior:	Trainee will be able to conduct pre-start procedures on 750 KW generator(s).
Notes:	
1. To successfully complete this element follow the steps outlined in the applicable technical manual exactly--no exceptions. 2. Any safety violation is an automatic failure.	

Notice. This AFQTP is *NOT* intended to replace the applicable technical references nor is it intended to replace hands-on training. It is to be used in conjunction with these for training purposes only.

CONDUCT PRE-START PROCEDURES

1. Background: A pre-operation inspection must be done in accordance with (IAW) the applicable TO, commercial manual and local references. This is the first and most important step and should never be skipped. This inspection will be preformed on each primary and secondary stand-by unit.

1.1. A pre-operational inspection, in general is a good visual inspection. It's imperative that the grounding of the generator be checked. The cable connections should be checked. The cables should be inspected for nicks, burrs, and worn spots. Ensure the unit is free of any tools or rags. Make certain there are no leaks and that all liquid spills are cleaned up. Also, check for loose and broken items.

1.2. All items will be performed at the beginning of each shift change and on every stand-by unit(s).

2. Complete the following AFQTPs:

2.1. AFQTP Electrical Power Production Module 12, 1 Aug 02: *AFS Specific Publication*.

2.2. CD-ROM AFQTP 3E0X2 Electrical Power Production, Version 1.0, Nov 97: *750 Kilowatt (KW) Generator (MEP-12)* for detailed instruction on conducting pre-start procedures for the 750KW generator. ***After completing the CD-ROM AFQTP see your Unit Education and Training Manager to take the <u>mandatory</u> CerTest # 8025, 750 QTP, Lesson 3. Trainee must score at least 80% to meet the minimum completion requirements for diamond tasks.***

> **NOTE:**
> The review questions for this material are in the above-mentioned CD-ROM.

3. If the equipment is available, then perform the following steps:

Step 1: Locate TO 35C2-3-474-1: ***Generator Set, Diesel Engine Driven, Wheel Mounted 750 KW*.**

Step 2: Conduct pre-start procedures IAW TO 35C2-2-474-1, Chapter 2, Section 1, Paragraph 2-3.1.

Notice. This AFQTP is *<u>NOT</u>* intended to replace the applicable technical references nor is it intended to replace hands-on training. It is to be used in conjunction with these for training purposes only.

CONDUCT PRE-START PROCEDURES

PERFORMANCE CHECKLIST

INSTRUCTIONS:

The trainee must satisfactorily perform all parts of the task without assistance. Evaluate the trainee's performance using this checklist.

DID THE TRAINEE….?	YES	NO
1. Check fuel, oil, and coolant for proper levels and check battery connections		
2. Check source of fuel-to-fuel supply No. 1 and/or No. 2 and place fuel selector valve, located on right side of generator set, in applicable position		
3. Check ground terminal for connection to a suitable ground		
4. Check that radiator and housing louvers are open and all doors are closed unless required for control panel access		
5. Check engagement of parking brakes		
6. Check the volt regulator selector switch should be in the auto position		
7. Check the droop setting of the governor		
8. Check that the parallel / single unit operation toggle switch should be in the single unit operation position		
9. Check that the fuel transfer system toggle switch is in the auto position		
10. Open the control panel and ensure that the frequency mode selector switch is in the 50 Hz or the 60 Hz position as applicable		
11. Check that the DC control circuit breaker is on (pushed in)		
12. Check that the load control circuit breaker (CB4), located inside of the control box, is in the on position		
13. Check that the maintenance lockout switch located on the right side of the generator set is in the operation position (pull out to position)		
14. Check that the auxiliary power unit (APU) or 24V slave battery is connected to the slave receptacle on the left side center support of the generator set		
15. Test the fault lights with the lamp test switch (push in) (All lights should turn on (except battery charger indicator light) and alarm sounded.)		
16. Use protective clothing and equipment		
17. Follow all safety procedures		

FEEDBACK: Trainer should provide both positive and/or negative feedback to the trainee immediately after the task is performed. This will ensure the issue is still fresh in the mind of both the trainee and trainer.

Notice. This AFQTP is *NOT* intended to replace the applicable technical references nor is it intended to replace hands-on training. It is to be used in conjunction with these for training purposes only.

MEP-012 GENERATORS

OPERATE

MODULE 28 **AFQTP UNIT 1**

CONDUCT STARTING PROCEDURES (28.1.2.6.2.)

Notice. This AFQTP is *NOT* intended to replace the applicable technical references nor is it intended to replace hands-on training. It is to be used in conjunction with these for training purposes only.

CONDUCT STARTING PROCEDURES

Task Training Guide

STS Reference Number/Title:	28.1.2.6.2., Conduct starting procedures (Operate).
Training References:	1. Technical Orders (TO) 35C2-3-474-1, *Generator Set, Diesel Engine Driven, Wheel Mounted 750 KW.* 2. Career Development Course (CDC) 3E052A Volume 1, Unit 6-1, Section 061, *Bare Base Electrical Distribution System Equipment.* 3. Video # 613208, *MEP-12A Generator Operation Part 1.* 4. Video # 613190*, MEP-12A Generator Operation Part 2.* 5. Video # 613196, *MEP-12A Generator Plant Operation.* 6. CD-ROM Air Force Qualification Training Package (AFQTP) 3E0X2 Electrical Power Production, Version 1.0, Nov 97: *750 Kilowatt Generator (MEP-12).* 7. AFQTP 3E0X2 Module 12, 1 Aug 02: *AFSC Specific Publications*.
Prerequisites:	1. **Possess as a minimum a 3E032 AFSC.** 2. **Review the following references:** 2.1. Review CDC 3E052A Volume 1, Unit 6-1, Section 061. 2.2. TO 35C2-3-474-1. 2.3. Videos # 613208, 613190, and 613196. 3. **Complete the following:** 3.1. AFQTP 3E0X2 Modules 12. 3.2. CD-ROM AFQTP Electrical Power Production, Version 1.0, Nov 97: *750 Kilowatt Generator (MEP-12).*
Equipment/Tools Required:	1. Computer to support AFQTP CD-ROMs. 2. Applicable technical references. 3. 750 KW generator(s). 4. Personal safety equipment. 5. General tool kit.
Learning Objective:	Given applicable technical references, conduct starting procedures for 750 KW generator(s) IAW prescribed procedures.
Samples of Behavior:	Trainee will be able to conduct starting procedures on 750 KW generator(s).
Notes:	
1. To successfully complete this element follow the steps outlined in the applicable technical manual exactly--no exceptions. 2. Any safety violation is an automatic failure.	

Notice. This AFQTP is *NOT* intended to replace the applicable technical references nor is it intended to replace hands-on training. It is to be used in conjunction with these for training purposes only.

CONDUCT STARTING PROCEDURES

1. Background: In order to minimize risk to personnel and damage to equipment, all personnel must be fully trained on proper starting procedures and be aware of all safety, cautions, and warnings dealing with the 750Kw generator. There are two types of starting procedures:

1.1. Norma l Starting Procedure (Above 40º F).

1.2. Normal Starting Procedures (Below 40º F).

2. Complete the following AFQTPs:

2.1. AFQTP Electrical Power Production Module 12, 1 Aug 02: *AFS Specific Publication*.

2.2. CD-ROM AFQTP 3E0X2 Electrical Power Production, Version 1.0, Nov 97: *750 Kilowatt (KW) Generator (MEP-12)* for detailed instruction on conducting start procedures for the 750KW generator. ***After completing the CD-ROM AFQTP see your Unit Education and Training Manager to take the mandatory CerTest # 8025, 750 QTP, Lesson 3. Trainee must score at least 80% to meet the minimum completion requirements for diamond tasks.***

NOTE:
The review questions for this material are in the above-mentioned CD-ROM.

3. If the equipment is available, then perform the following steps:

Step 1: Locate TO 35C2-3-474-1: ***Generator Set, Diesel Engine Driven, Wheel Mounted 750 KW*****.**

Step 2: Conduct normal starting procedures (above 40º F) IAW TO 35C2-2-474-1, Chapter 2, Section 1, Paragraph 2-3.2.2.

Step 3: Conduct normal starting procedures (below 40º F) IAW TO 35C2-2-474-1, Chapter 2, Section 1, Paragraph 2-3.2.4.

Notice. This AFQTP is *NOT* intended to replace the applicable technical references nor is it intended to replace hands-on training. It is to be used in conjunction with these for training purposes only.

CONDUCT STARTING PROCEDURES

PERFORMANCE CHECKLIST

INSTRUCTIONS:

The trainee must satisfactorily perform all parts of the task without assistance. Evaluate the trainee's performance using this checklist.

DID THE TRAINEE….?	YES	NO
Normal Starting Procedures (Above 40º F)		
1. Place the engine control toggle switch in the start position to crank the engine		
2. Hold the engine control toggle switch until the oil pressure gage reads 25 to 85 psi (172 to 551 kPa)		
3. Adjust the frequency and voltage settings to the desired values		
4. Use protective clothing and equipment		
5. Follow all safety procedures		
Normal Starting Procedures (Below 40º F)		
1. Use the ether primer by placing the ether primer toggle switch in the on position and release while placing the engine control toggle switch in the start position to crank the engine		
2. Understand how the ether primer works		
3. Allow the generator to operate at idle speed until it is running smoothly		
4. Hold the engine control toggle switch until the oil pressure gage reads 25 to 85 psi (172 to 551 kPa)		
5. Adjust the frequency and voltage settings to the desired values		
6. Use protective clothing and equipment		
7. Follow all safety procedures		

FEEDBACK: Trainer should provide both positive and/or negative feedback to the trainee immediately after the task is performed. This will ensure the issue is still fresh in the mind of both the trainee and trainer.

Notice. This AFQTP is *NOT* intended to replace the applicable technical references nor is it intended to replace hands-on training. It is to be used in conjunction with these for training purposes only.

MEP-012 GENERATORS

OPERATE

MODULE 28 **AFQTP UNIT 1**

PERFORM SINGLE UNIT OPERATION (28.1.2.6.3.)

Notice. This AFQTP is *NOT* intended to replace the applicable technical references nor is it intended to replace hands-on training. It is to be used in conjunction with these for training purposes only.

PERFORM SINGLE UNIT OPERATION

Task Training Guide

STS Reference Number/Title:	28.1.2.6.3., Perform single unit operation (Operate).
Training References:	1. Technical Orders (TO) 35C2-3-474-1, *Generator Set, Diesel Engine Driven, Wheel Mounted 750 KW.* 2. Career Development Course (CDC) 3E052A Volume 1, Unit 6-1, Section 061, *Bare Base Electrical Distribution System Equipment.* 3. Video # 613208, *MEP-12A Generator Operation Part 1.* 4. Video # 613190*, MEP-12A Generator Operation Part 2.* 5. Video # 613196, *MEP-12A Generator Plant Operation.* 6. CD-ROM Air Force Qualification Training Package (AFQTP) 3E0X2 Electrical Power Production, Version 1.0, Nov 97: *750 Kilowatt Generator (MEP-12).* 7. AFQTP 3E0X2 Module 12, 1 Aug 02: *AFSC Specific Publications*.
Prerequisites:	1. **Possess as a minimum a 3E032 AFSC.** 2. **Review the following references:** 2.1. Review CDC 3E052A Volume 1, Unit 6-1, Section 061. 2.2. TO 35C2-3-474-1. 2.3. Videos # 613208, 613190, and 613196. 3. **Complete the following:** 3.1. AFQTP 3E0X2 Modules 12. 3.2. CD-ROM AFQTP Electrical Power Production, Version 1.0, Nov 97: *750 Kilowatt Generator (MEP-12).*
Equipment/Tools Required:	1. Computer to support AFQTP CD-ROMs. 2. Applicable technical references. 3. 750 KW generator(s). 4. Personal safety equipment. 5. General tool kit.
Learning Objective:	Given applicable technical references, perform single unit operation for 750 KW generator(s) IAW prescribed procedures.
Samples of Behavior:	Trainee will be able to perform single unit operation on 750 KW generator(s).
Notes:	
1. To successfully complete this element follow the steps outlined in the applicable technical manual exactly--no exceptions. 2. Any safety violation is an automatic failure.	

Notice. This AFQTP is *NOT* intended to replace the applicable technical references nor is it intended to replace hands-on training. It is to be used in conjunction with these for training purposes only.

PERFORM SINGLE UNIT OPERATION

1. Background: Single unit operation is fundamental stepping block prior to operating the units in parallel. However, you should never start a unit until a pre-operation inspection is done in accordance with the applicable TO, commercial manual, and local references.

2. Complete the following AFQTPs:

2.1. AFQTP 3E0X2 Module 12, 1 Aug 02: *AFS Specific Publication*.

2.2. CD-ROM AFQTP 3E0X2 Electrical Power Production, Version 1.0, Nov 97: *750 Kilowatt (KW) Generator (MEP-12)* for detailed instruction on perform single unit operation for the 750KW generator. ***After completing the CD-ROM AFQTP see your Unit Education and Training Manager to take the mandatory CerTest # 8025, 750 QTP, Lesson 3. Trainee must score at least 80% to meet the minimum completion requirements for diamond tasks.***

NOTE:
The review questions for this material are in the above-mentioned CD-ROM.

3. If the equipment is available, then perform the following steps:

Step 1: Locate TO 35C2-3-474-1: ***Generator Set, Diesel Engine Driven, Wheel Mounted 750 KW*****.**

Step 2: Perform single unit operation IAW TO 35C2-2-474-1, Chapter 2, Section 1, Paragraph 2-3.2.1.

Notice. This AFQTP is *NOT* intended to replace the applicable technical references nor is it intended to replace hands-on training. It is to be used in conjunction with these for training purposes only.

PERFORM SINGLE UNIT OPERATION

PERFORMANCE CHECKLIST

INSTRUCTIONS:

The trainee must satisfactorily perform all parts of the task without assistance. Evaluate the trainee's performance using this checklist.

DID THE TRAINEE….?	YES	NO
1. Close the breaker control selector switch by placing the synchroscope selector switch in the on position and hold the breaker control selector switch in the close position until the closed indicator light is energized		
2. Place the synchroscope selector switch in the OFF position		
3. Understand that he is to monitor the generator set periodically (at least once an hour) for signs of possible malfunctions		
4. Check and record lubrication oil pressure (25 to 80 psi (172 to 551 kPa))		
5. Check engine oil level with engine running normally		
6. Check and record coolant temperature		
7. Observe and record applicable items on AF Form 1167 or equivalent hourly as required		
8. Use protective clothing and equipment		
9. Follow all safety procedures		

FEEDBACK: Trainer should provide both positive and/or negative feedback to the trainee immediately after the task is performed. This will ensure the issue is still fresh in the mind of both the trainee and trainer.

Notice. This AFQTP is *NOT* intended to replace the applicable technical references nor is it intended to replace hands-on training. It is to be used in conjunction with these for training purposes only.

MEP-012 GENERATORS

OPERATE

MODULE 28 **AFQTP UNIT 1**

PERFORM PARALLEL UNIT OPERATION (28.1.2.6.4.)

Notice. This AFQTP is *NOT* intended to replace the applicable technical references nor is it intended to replace hands-on training. It is to be used in conjunction with these for training purposes only.

PERFORM PARALLEL UNIT OPERATION

Task Training Guide

STS Reference Number/Title:	28.1.2.6.4., Perform parallel unit operation (Operate).
Training References:	1. Technical Orders (TO) 35C2-3-474-1, *Generator Set, Diesel Engine Driven, Wheel Mounted 750 KW.* 2. Career Development Course (CDC) 3E052A Volume 1, Unit 6-1, Section 061, *Bare Base Electrical Distribution System Equipment.* 3. Video # 613208, *MEP-12A Generator Operation Part 1.* 4. Video # 613190*, MEP-12A Generator Operation Part 2.* 5. Video # 613196, *MEP-12A Generator Plant Operation.* 6. CD-ROM Air Force Qualification Training Package (AFQTP) 3E0X2 Electrical Power Production, Version 1.0, Nov 97: *750 Kilowatt Generator (MEP-12).* 7. AFQTP 3E0X2 Module 12, 1 Aug 02: *AFSC Specific Publications*.
Prerequisites:	1. **Possess as a minimum a 3E032 AFSC.** 2. **Review the following references:** 2.1. Review CDC 3E052A Volume 1, Unit 6-1, Section 061. 2.2. TO 35C2-3-474-1. 2.3. Videos # 613208, 613190, and 613196. 3. **Complete the following:** 3.1. AFQTP 3E0X2 Modules 12. 3.2. CD-ROM AFQTP Electrical Power Production, Version 1.0, Nov 97: *750 Kilowatt Generator (MEP-12).*
Equipment/Tools Required:	1. Computer to support AFQTP CD-ROMs. 2. Applicable technical references. 3. 750 KW generator(s). 4. Personal safety equipment. 5. General tool kit.
Learning Objective:	Given applicable technical references, perform parallel unit operation for 750 KW generator(s) IAW prescribed procedures.
Samples of Behavior:	Trainee will be able to perform parallel unit operation on 750 KW generator(s).
Notes:	
1. To successfully complete this element follow the steps outlined in the applicable technical manual exactly--no exceptions. 2. Any safety violation is an automatic failure.	

Notice. This AFQTP is *NOT* intended to replace the applicable technical references nor is it intended to replace hands-on training. It is to be used in conjunction with these for training purposes only.

PERFORM PARALLEL UNIT OPERATION

1. Background: In this unit we will discuss how to operate a unit in parallel.

2. Complete the following AFQTPs:

2.1. AFQTP 3E0X2 Module 12, 1 Aug 02: *AFS Specific Publication*.

2.2. CD-ROM AFQTP 3E0X2 Electrical Power Production, Version 1.0, Nov 97: *750 Kilowatt (KW) Generator (MEP-12)* for detailed instruction on perform parallel unit operation for the 750KW generator. ***After completing the CD-ROM AFQTP see your Unit Education and Training Manager to take the mandatory CerTest # 8025, 750 QTP, Lesson 3. Trainee must score at least 80% to meet the minimum completion requirements for diamond tasks.***

> **NOTE:**
> The review questions for this material are in the above-mentioned CD-ROM.

3. If the equipment is available, then perform the following steps:

Step 1: Locate TO 35C2-3-474-1: ***Generator Set, Diesel Engine Driven, Wheel Mounted 750 KW*****.**

Step 2: Perform parallel unit operation IAW TO 35C2-2-474-1, Chapter 2, Section 1, Paragraph 2-3.2.6.

Notice. This AFQTP is *NOT* intended to replace the applicable technical references nor is it intended to replace hands-on training. It is to be used in conjunction with these for training purposes only.

PERFORM PARALLEL UNIT OPERATION

PERFORMANCE CHECKLIST

INSTRUCTIONS:

The trainee must satisfactorily perform all parts of the task without assistance. Evaluate the trainee's performance using this checklist.

DID THE TRAINEE….?	YES	NO
1. Place the parallel / single unit operation toggle switch in the parallel operation position on the generator set and all other units to be paralleled		
2. Adjust the droop rheostat on the governor control to 3% frequency at the rated load (approximately 9 o'clock on the dial) on all units to be paralleled		
3. Start unit number 1 in accordance with figure 2-3 or 2-5 (where applicable) and connect it to the bus		
4. Start unit number 2 in accordance with figure 2-3 or 2-5 (where applicable)		
5. Place the synchroscope selector switch in the on position on the generator set and all other units to be paralleled		
6. Adjust the frequency using the frequency adjust rheostat causing the synchroscope to rotate slowly in the fast (CW) direction and the synchronizing lights to slowly turn dark and light		
7. When the synchroscope is at the 12 o'clock position and the lights are dark, place the breaker control selector switch in the closed position until the closed indicator light is energized		
8. Place the synchroscope in the off position on both units		
9. Adjust the frequency and voltage as required to share kilowatt and reactive load (power factor) equally		
10. Add additional units to the bus in the same manner (if applicable)		
11. Use protective clothing and equipment		
12. Follow all safety procedures		

FEEDBACK: Trainer should provide both positive and/or negative feedback to the trainee immediately after the task is performed. This will ensure the issue is still fresh in the mind of both the trainee and trainer.

Notice. This AFQTP is *NOT* intended to replace the applicable technical references nor is it intended to replace hands-on training. It is to be used in conjunction with these for training purposes only.

MEP-012 GENERATORS

OPERATE

MODULE 28 **AFQTP UNIT 1**

PERFORM REMOTE OPERATION (28.1.2.6.5.)

Notice. This AFQTP is *NOT* intended to replace the applicable technical references nor is it intended to replace hands-on training. It is to be used in conjunction with these for training purposes only.

PERFORM REMOTE OPERATION

Task Training Guide

STS Reference Number/Title:	28.1.2.6.5., Perform remote operation (Operate).
Training References:	1. Technical Orders (TO) 35C2-3-474-1, *Generator Set, Diesel Engine Driven, Wheel Mounted 750 KW.* 2. Career Development Course (CDC) 3E052A Volume 1, Unit 6-1, Section 061, *Bare Base Electrical Distribution System Equipment.* 3. Video # 613208, *MEP-12A Generator Operation Part 1.* 4. Video # 613190*, MEP-12A Generator Operation Part 2.* 5. Video # 613196, *MEP-12A Generator Plant Operation.* 6. CD-ROM Air Force Qualification Training Package (AFQTP) 3E0X2 Electrical Power Production, Version 1.0, Nov 97: *750 Kilowatt Generator (MEP-12).* 7. AFQTP 3E0X2 Module 12, 1 Aug 02: *AFSC Specific Publications*.
Prerequisites:	1. **Possess as a minimum a 3E032 AFSC.** 2. **Review the following references:** 2.1. Review CDC 3E052A Volume 1, Unit 6-1, Section 061. 2.2. TO 35C2-3-474-1. 2.3. Videos # 613208, 613190, and 613196. 3. **Complete the following:** 3.1. AFQTP 3E0X2 Modules 12. 3.2. CD-ROM AFQTP Electrical Power Production, Version 1.0, Nov 97: *750 Kilowatt Generator (MEP-12).*
Equipment/Tools Required:	1. Computer to support AFQTP CD-ROMs. 2. Applicable technical references. 3. 750 KW generator(s). 4. Personal safety equipment. 5. General tool kit.
Learning Objective:	Given applicable technical references, perform remote operation for 750 KW generator(s) IAW prescribed procedures.
Samples of Behavior:	Trainee will be able to perform remote operation on 750 KW generator(s).
Notes:	
1. To successfully complete this element follow the steps outlined in the applicable technical manual exactly--no exceptions. 2. Any safety violation is an automatic failure.	

Notice. This AFQTP is *NOT* intended to replace the applicable technical references nor is it intended to replace hands-on training. It is to be used in conjunction with these for training purposes only.

PERFORM REMOTE OPERATION

1. Background: Remote operation of the MEP-012A generator set consists of a single unit or parallel operation with single/multiple control panels located in a single control center!

2. Complete the following AFQTPs:

2.1. AFQTP 3E0X2 Module 12, 1 Aug 02: *AFS Specific Publication*.

2.2. CD-ROM AFQTP 3E0X2 Electrical Power Production, Version 1.0, Nov 97: *750 Kilowatt (KW) Generator (MEP-12)* for detailed instruction on perform parallel unit operation for the 750KW generator. ***After completing the CD-ROM AFQTP see your Unit Education and Training Manager to take the mandatory CerTest # 1126, 750 QTP, Remote Operation. Trainee must score at least 80% to meet the minimum completion requirements for diamond tasks.***

NOTE:
The review questions for this material are in the above-mentioned CD-ROM.

3. Remote Operation. Remote operation of the MEP-012A generator set consists of single unit or parallel operation with single/multiple control panels located in a single control center.

Figure 1. A VARIANT OF A MEP-012A CONTROL CENTER.

3.1. Operation wise, there is no difference in the single unit/parallel operation of the MEP-012A generator set (28.1.2.6.3 / 28.1.2.6.4) with the control panel(s) located on the unit itself or remotely located in the control center.

3.2. Relocating the control panels to a single control center simply involves series connection of dual control cable(s) up to a maximum of 150' from the generator set! These cables are packaged on each generator in 50' sections with a male (pins) & female (socket) cannon plug on each end.

3.3. Operational tempo, and weather have extreme effects on these control cables, and particular attention should be given to:

3.3.1. Connection tightness.

3.3.2. Weatherproofing connections.

3.3.3. Should never be pulled taught due to equipment or cable movement.

3.4. Failure of the preceding rules-of-thumb will certainly lead to many faulty symptoms, at worst case, loss of generator control.

4. Perform Remote Operation.

4.1. To perform <u>single</u> unit remote operation, follow theses steps:

Step 1: Locate TO 35C2-3-474-1: *Generator Set, Diesel Engine Driven, Wheel Mounted 750 KW*.

Step 2: Perform single unit operation IAW TO 35C2-2-474-1, Chapter 2, Section 1, Paragraph 2-3.2.1.

4.2. To perform <u>parallel</u> unit remote operation, follow these steps:

Step 1: Locate TO 35C2-3-474-1: *Generator Set, Diesel Engine Driven, Wheel Mounted 750 KW*.

Step 2: Perform parallel unit operation IAW TO 35C2-2-474-1, Chapter 2, Section 1, Paragraph 2-3.2.6.

Notice. This AFQTP is *<u>NOT</u>* intended to replace the applicable technical references nor is it intended to replace hands-on training. It is to be used in conjunction with these for training purposes only.

PERFORM SINGLE UNIT/PARALLEL REMOTE OPERATION

PERFORMANCE CHECKLIST

INSTRUCTIONS:

The trainee must satisfactorily perform all parts of the task without assistance. Evaluate the trainee's performance using this checklist.

DID THE TRAINEE….????	YES	NO
Single Unit Remote Operation.		
1. Close the breaker control selector switch by placing the synchroscope selector switch in the on position and hold the breaker control selector switch in the close position until the closed indicator light is energized		
2. Place the synchroscope selector switch in the OFF position		
3. Understand that he is to monitor the generator set periodically (at least once an hour) for signs of possible malfunctions		
4. Check and record lubrication oil pressure (25 to 80 psi (172 to 551 kPa))		
5. Check engine oil level with engine running normally		
6. Check and record coolant temperature		
7. Observe and record applicable items on AF Form 1167 or equivalent hourly as required		
8. Use protective clothing and equipment		
9. Follow all safety procedures		
Parallel Unit Remote Operation.		
1. Place the parallel / single unit operation toggle switch in the parallel operation position on the generator set and all other units to be paralleled		
2. Adjust the droop rheostat on the governor control to 3% frequency at the rated load (approximately 9 o'clock on the dial) on all units to be paralleled		
3. Start unit number 1 in accordance with figure 2-3 or 2-5 (where applicable) and connect it to the bus		
4. Start unit number 2 in accordance with figure 2-3 or 2-5 (where applicable)		
5. Place the synchroscope selector switch in the on position on the generator set and all other units to be paralleled		
6. Adjust the frequency using the frequency adjust rheostat causing the synchroscope to rotate slowly in the fast (CW) direction and the synchronizing lights to slowly turn dark and light		
7. When the synchroscope is at the 12 o'clock position and the lights are dark, place the breaker control selector switch in the closed position until the closed indicator light is energized		
8. Place the synchroscope in the off position on both units		
9. Adjust the frequency and voltage as required to share kilowatt and reactive load (power factor) equally		
10. Add additional units to the bus in the same manner (if applicable)		
11. Use protective clothing and equipment		
12. Follow all safety procedures		

FEEDBACK: Trainer should provide both positive and/or negative feedback to the trainee immediately after the task is performed. This will ensure the issue is still fresh in the mind of both the trainee and trainer.

Notice. This AFQTP is *NOT* intended to replace the applicable technical references nor is it intended to replace hands-on training. It is to be used in conjunction with these for training purposes only.

MEP-012 GENERATORS

OPERATE

MODULE 28 **AFQTP UNIT 1**

PERFORM SCHEDULED INSPECTIONS (28.1.2.7.)

Notice. This AFQTP is *NOT* intended to replace the applicable technical references nor is it intended to replace hands-on training. It is to be used in conjunction with these for training purposes only.

PERFORM SCHEDULE INSPECTIONS

Task Training Guide

STS Reference Number/Title:	28.1.2.7., Perform schedule inspections (Operate).
Training References:	1. Technical Orders (TO) 35C2-3-474-1, *Generator Set, Diesel Engine Driven, Wheel Mounted 750 KW.* 2. Career Development Course (CDC) 3E052A Volume 1, Unit 6-1, Section 061, *Bare Base Electrical Distribution System Equipment.* 3. Video # 613208, *MEP-12A Generator Operation Part 1.* 4. Video # 613190*, MEP-12A Generator Operation Part 2.* 5. Video # 613196, *MEP-12A Generator Plant Operation.* 6. CD-ROM Air Force Qualification Training Package (AFQTP) 3E0X2 Electrical Power Production, Version 1.0, Nov 97: *750 Kilowatt Generator (MEP-12).* 7. AFQTP 3E0X2 Module 12, 1 Aug 02: *AFSC Specific Publications*.
Prerequisites:	1. **Possess as a minimum a 3E032 AFSC.** 2. **Review the following references:** 2.1. Review CDC 3E052A Volume 1, Unit 6-1, Section 061. 2.2. TO 35C2-3-474-1. 2.3. Videos # 613208, 613190, and 613196. 3. **Complete the following:** 3.1. AFQTP 3E0X2 Modules 12. 3.2. CD-ROM AFQTP Electrical Power Production, Version 1.0, Nov 97: *750 Kilowatt Generator (MEP-12).*
Equipment/Tools Required:	1. Computer to support AFQTP CD-ROMs. 2. Applicable technical references. 3. 750 KW generator(s). 4. Personal safety equipment. 5. General tool kit.
Learning Objective:	Given applicable technical references, perform scheduled inspections for 750 KW generator(s) IAW prescribed procedures.
Samples of Behavior:	Trainee will be able to perform schedule inspections on 750 KW generator(s).
Notes:	
1. To successfully complete this element follow the steps outlined in the applicable technical manual exactly--no exceptions. 2. Any safety violation is an automatic failure.	

Notice. This AFQTP is *NOT* intended to replace the applicable technical references nor is it intended to replace hands-on training. It is to be used in conjunction with these for training purposes only.

PERFORM SCHEDULED INSPECTIONS

1. Background: To ensure that the generator set is ready for operation at all time. The generator set must be inspected systematically so defects may be discovered and corrected before they result in serious damage or failure.

1.1. Defects discovered during operation of the generator set must be noted for immediate correction as soon as operation ceased.

1.2. Stop the operation at once if a deficiency is noticed that would cause immediate damage to the generator set.

1.3. Record all deficiencies and shortcoming, together with the corrective action taken, on the applicable forms.

2. Complete the following AFQTPs:

2.1. AFQTP 3E0X2 Module 12, 1 Aug 02: *AFS Specific Publication*.

2.2. CD-ROM AFQTP 3E0X2 Electrical Power Production, Version 1.0, Nov 97: *750 Kilowatt (KW) Generator (MEP-12)* for detailed instruction on perform parallel unit operation for the 750KW generator. ***After completing the CD-ROM AFQTP see your Unit Education and Training Manager to take the <u>mandatory</u> CerTest # 8026, 750 QTP, Schedule Inspections. Trainee must score at least 80% to meet the minimum completion requirements for diamond tasks.***

3. ***If the equipment is available, then perform these steps for your hands-on certification:***

3.1. <u>HOURLY CHECKLIST</u>. The following items will be checked every hour at manned power plants.

SAFETY:
THESE GENERATORS PRODUCE HIGH VOLTAGE (4160 VAC)!! BE VERY CAREFUL WHEN WORKING AROUND THESE UNITS!!!

Step 1. Check for abnormal engine vibration.

Step 2. Check oil level in sight glass; ensure it is in the operating range.

Step 3. Check air restriction indicators; make sure it is still below the 20-25 inch range.

Step 4. Check for alternator fault light not to be on. Located where control panel mounts. If alternator is not working, control battery will go dead and unit will shut down causing an outage.

Step 5. Check for any leaks. (Oil, fuel, coolant, or exhaust).

Step 6. Check for any unusual sounds or smells.

Step 7. Check radiator for debris.

Step 8. Visually check all belts.

Notice. This AFQTP is *<u>NOT</u>* intended to replace the applicable technical references nor is it intended to replace hands-on training. It is to be used in conjunction with these for training purposes only.

Step 9. Ensure louvers are pinned open.

Step 10. Make sure that the stand-by unit is hooked up to the start cart and start cart is off.

Step 11. Ensure that on-line units are unplugged from the start cart.

Step 12. Check day tank fuel level, it should be filling or at least 2/3 full.

Step 13. Are control panel gauges and indicators reading normal? If not, troubleshoot and correct.

3.2. 300-HOUR PREVENTIVE MAINTENANCE INSPECTION (PMI).

Step 1: Review Historical Records.

Step 2: High Voltage.

2.1. Check Load Break Connectors are tight.

2.2. Check T4-T9: H1 – H2 around 130 Ohms (Blue 20:1) "No substitutes."

2.3. Check T4-T9: X1 – X2 around 0.7 Ohms (Blue 20:1).

2.4. Check Fuses T4 – T9 are PT fuse, 2E Amps for (Blue 20:1).

2.5. Check T2 & T3 Ohms (Less than 100 Ohms) from H1 - H2, H2 – H3 "No substitutes."

2.6. Check T2 & T3 Base Is Grounded.

2.7. Check T2 & T3; H1, H2, H3 to Ground (Should be open "infinity").

2.8. Check T2 & T3 fuses (HVU 2) to make sure filament is not loose.

2.9. Check that 170 Amp fuses on CB5, that the striker is about to activate the switch.

2.10. Check CB5 fuse is either 1.5 Amp Slow Blow on newer breakers or 5 Amp on older breaker. (The fuse holder is smaller for the 5 Amp; a 1.5Amp SB fuse will not fit in fuse holder.)

2.11. Replace 5 Amp terminal board with a 1.5 Amp SB terminal board (If parts are available).

2.12. Rewire CB5 N/O Contacts (P17H on pin 9, P22A on pin 10, P34E on pin 11, P6M on pin 12).

2.13. Check wiring in the CB5 that nothing is burnt.

2.14. Check Ohm reading on coils in CB5 for 17.5 ohms and the resistors for 200 ohms.

2.15. Check Ceramic Vacuum Contactors are not cracked or damaged on CB5.

2.16. Check Capacitors C1-C3 are not damaged or that it is not leaking.

2.17. Check Capacitors C1-C3 with megohmmeter (Should be 7.75 to 11.25 megohms).

2.18. Check Lightning Arrestors check for cracks or uneven mounting surface. (Resistance should be infinity between lug and ground).

Notice. This AFQTP is *NOT* intended to replace the applicable technical references nor is it intended to replace hands-on training. It is to be used in conjunction with these for training purposes only.

2.19. Check Lugs on bushings L1, L2, L3, and L0 that wires are tight.

2.20. Check CT's wire pins, do not spin.

2.21. Check CT1-CT4 and CT7 with megohmmeter (Should not be less than ten megohms).

2.22. Check wires from CT5 to CT6 are not shorting to ground.

2.23. Check Rotating Rectifier that wires are tight and nothing burnt.

2.24. Check all screws for wire are tight.

2.25. Check wires are not damaged.

2.26. Check Grounding (Continuity between GRD 1 to GRD 2, GRD 2 to GRD 3).

2.27. If it has High Voltage door switches make sure they are adjusted properly out.

2.28. Clean area (Vacuum, Air Compress).

Step 3: Low Voltage.

3.1. Check 24 VDC Relay coil for about 450 Ohms.

3.2. Check 12 VDC Relay coil for about 120 Ohms (K29).

3.3. Check contacts are not burned on Relays.

3.4. Check Relay holders are not cracked or damaged.

3.5. Proper Relays in correct place.

3.6. Inspect all CR's (diodes) are not broken or cracked test accordingly.

3.7. Check Silver relays, all contacts are in proper position.

3.8. Check Continuity on CB2 (GFI 15 amps), CB4 (5 amps), CB6 (10 amps).

3.9. Check Governor set with droop about 3 or 9'o clock.

3.10. Check Fuse Holders contacts are tight.

3.11. Check Voltage Regulator fuses are 15 Amp and good.

3.12. Check fuses F4 - F6, F11, F15 – F17 are 4Amps.

3.13. Check fuses F8 – F10, F22 are 10 Amps.

3.14. Check all screws for wires are tight.

3.15. Check Synchroscope coils for about 796 ohms between 1 and 2 , 526 ohms between 3 and 5.

3.16. Inspect Control Panel all wires are tight.

3.17. Check all canon plugs are on tight.

3.18. Check all wires around engine are tight.

3.19. Check Speed Switch is secured to unit.

3.20. Check Magnetic Pick-up is good and adjusted properly (½ turn back).

3.21. Check Batteries Voltage and if they are cleaned.

3.22. Clean area.

Step 4. Starting / Running Checks.

4.1. Check Fault lights.

4.2. Check Voltmeter / Ammeter / kW Meter are Zeroed.

4.3. Check idle speed: set at 1000 RPM or about 33 Hz.

Notice. This AFQTP is *NOT* intended to replace the applicable technical references nor is it intended to replace hands-on training. It is to be used in conjunction with these for training purposes only.

4.4. Frequency meter 60 Hz / Check with a Frequency meter.

4.5. Magnetic Pick up voltage 0.5 to 30 VAC.

4.6. Check Overspeed setting between 2070 RPM (69 Hz) to 2250 RPM (75 Hz) for mechanical speedswitch.

4.7. Check R1 Voltage adjust rheostat for proper adjustment.

4.8. Check R2 Frequency adjust rheostat for proper adjustment.

4.9. Close CB5 with no load, Zero Ammeter and kW meters.

4.10. Check CB5 Lights operate (Adjust Auxiliary Contacts as necessary).

4.11. Check Current Boost Module light illuminated (240 VAC at pins 3 & 4).

4.12. Check Fuses Voltage F4-(120 VAC), F5-(120 VAC), F6-(120 VAC), F8-(240 VAC), F9-(120 VAC), F10-(20 VAC), F11-(0 VAC in Auto), F15-(120 VAC), F16-(120 VAC), F17-(120 VAC), F22-(27 VDC +/- 2 VDC ”G1”).

4.13. Check Voltage Readings compared to fuses, determine if Voltmeter needs adjustment or replacement.

4.14. Check generator for load handling.

4.15. Check Fault Lights without using Battle Short.

4.16. Check Frequency Deflection when Fault light test switch pushed.

4.17. Check generator Water Temperatures 160° F to 205° F at rated load.

4.18. Check generator Oil Temperature 180° F to 245° F at rated load.

4.19. Check Oil Pressure 25 psi to 80 psi at rated load.

4.20. Check to see if Thermostats are operational.

4.21. Load shock unit.

4.22. Check K21 Contacts 9 and 10 are closing around the 1100 to 1200 position and open rest of the time.

4.23. Parallel unit.

Step 5. Speed Switch Security.

Step 6. Fan Belt Shock Absorber Security and alignment of Idler Pulley.

Step 7. Annual Coolant System.

7.1. Test for SCA level about 1.5 adjust accordingly (6.4 unit for each 0.1 level needed raised).

7.2. Test Annually.

7.3. Flush Every 2 Years.

7.4. Make sure it has a good level, and bleed system.

7.5. Check to see if it has thermostats.

3.3. 1500 AND 6000-HOUR INSPECTION.

Step 1. Valve and Injector Adjustment.

Step 2: Refer to Cummins Operation and Maintenance manual for rest of inspection.

Step 3. Check if any maintenance is needed.

Notice. This AFQTP is *NOT* intended to replace the applicable technical references nor is it intended to replace hands-on training. It is to be used in conjunction with these for training purposes only.

PERFORM SCHEDULED INSPECTIONS

PERFORMANCE CHECKLIST

INSTRUCTIONS:

The trainee must satisfactorily perform all parts of the task without assistance. Evaluate the trainee's performance using this checklist.

DID THE TRAINEE….?	YES	NO
1. Check oil level in sight glass to ensure it is in the operating range?		
2. Check to ensure day tank fuel level is a minimum 2/3 full?		
3. Review historical records prior to performing 300 hour PMI?		
4. Check high voltage load break connectors for integrity?		
5. Check low voltage components for serviceability?		
6. Perform appropriate start/running checks?		
7. Check coolant system for appropriate levels?		
8. Record all deficiencies and shortcomings, to include corrective action taken, on the applicable forms?		

FEEDBACK: Trainer should provide both positive and/or negative feedback to the trainee immediately after the task is performed. This will ensure the issue is still fresh in the mind of both the trainee and trainer.

Notice. This AFQTP is *NOT* intended to replace the applicable technical references nor is it intended to replace hands-on training. It is to be used in conjunction with these for training purposes only.

MEP-012 GENERATORS

TROUBLESHOOTING

MODULE 28 **AFQTP UNIT 1**

ENGINE SYSTEMS (28.1.2.8.1.)
HIGH VOLTAGE (28.1.2.8.2.1.)
LOW VOLTAGE (28.1.2.8.2.2.)

Notice. This AFQTP is *NOT* intended to replace the applicable technical references nor is it intended to replace hands-on training. It is to be used in conjunction with these for training purposes only.

TROUBLESHOOTING ENGINE SYSTEMS, HIGH AND LOW VOLTAGE

Task Training Guide

STS Reference Number/Title:	28.1.2.8.1., Troubleshooting engine systems. 28.1.2.8.2.1., Troubleshooting high voltage. 28.1.2.8.2.2., Troubleshooting low voltage.
Training References:	1. Technical Orders (TO) 35C2-3-474-1, *Generator Set, Diesel Engine Driven, Wheel Mounted 750 KW.* 2. Career Development Course (CDC) 3E052A Volume 1, Unit 6-1, Section 061, *Bare Base Electrical Distribution System Equipment* and Volume 2, Unit 4-1, *Troubleshooting Principles* and Unit 4-2, *Troubleshooting Procedures*. 3. Video # 613208, *MEP-12A Generator Operation Part 1.* 4. Video # 613190*, MEP-12A Generator Operation Part 2.* 5. Video # 613196, *MEP-12A Generator Plant Operation.* 6. CD-ROM Air Force Qualification Training Package (AFQTP) 3E0X2 Electrical Power Production, Version 1.0, Nov 97: *750 Kilowatt Generator (MEP-12).* 7. AFQTP 3E0X2 Module 12, 1 Aug 02: *AFSC Specific Publications*.
Prerequisites:	1. **Possess as a minimum a 3E032 AFSC.** 2. **Review the following references:** 2.1. Review CDC 3E052A Volume 1, Unit 6-1, Section 061and Volume 2, Unit 4-1 and 4-2. 2.2. TO 35C2-3-474-1. 2.3. Videos # 613208, 613190, and 613196. 3. **Complete the following:** 3.1. AFQTP 3E0X2 Modules 12, 1 Aug 02: *AFSC Specific Publications*. 3.2. CD-ROM AFQTP Electrical Power Production, Version 1.0, Nov 97: *750 Kilowatt Generator (MEP-12).*
Equipment/Tools Required:	1. Computer to support AFQTP CD-ROMs. 2. Applicable technical references. 3. 750 KW generator(s). 4. Personal safety equipment. 5. General tool kit.
Learning Objective:	Given applicable technical references, conduct troubleshooting of the engine systems and high and low voltage for 750 KW generator(s) IAW prescribed procedures.
Samples of Behavior:	Trainee will be able to conduct troubleshooting procedures on 750 KW generator(s).
Notes:	
1. To successfully complete this element follow the steps outlined in the applicable technical manual exactly--no exceptions. 2. Any safety violation is an automatic failure.	

Notice. This AFQTP is *NOT* intended to replace the applicable technical references nor is it intended to replace hands-on training. It is to be used in conjunction with these for training purposes only.

TROUBLESHOOTING ENGINE SYSTEMS, HIGH AND LOW VOLTAGE

1. Background: Since troubleshooting is a step-by-step procedure, the effectiveness depends on how much you know about the equipment and how much you think while working. The ability to troubleshoot depends on your capability to think and apply knowledge. To troubleshoot effectively, you must follow a systematic procedure. First, study the symptoms of the trouble thoroughly and ask yourself these questions:

1.1. What were the warning signs preceding the trouble?

1.2. What recent repair has been done?

1.3. Has a similar trouble occurred before?

2. Next, follow the basic troubleshooting procedures:

2.1. The first step is to **perform an operational check** of the engine to determine if an actual problem really exists. Follow step-by-step procedures in the technical manual for your particular item of equipment. Perform a visual inspection of the electrical components, check wiring harness for breaks, and check relays for loose connections, evidence of over heating, cracks, or any signs of damage.

2.2. The second step in troubleshooting is to **analyze the malfunction**. Detect the trouble by sight, sound, smell, or feel. Once you are aware of a malfunction, consult the proper technical manual for normal engine operation. This gives one a clearer understanding of how the engine should be working. One can also use the troubleshooting chart located in the proper technical manual.

2.2.1. It is in this step that one determines the type of trouble in order to determine the type of test equipment to use.

2.3. The third step is **locating the malfunction**; this is the most difficult task. In this step, one will need to stay focused on the problem and not allow frustration to set in. This can cause one to resort back to the remove and replace technique. Perform the previous steps; determine type of test equipment needed to check the engine performance. Understanding engine operation and knowing the “how, what, when and where” in engine operation is key to locating the malfunction.

2.4. The fourth step is to **perform corrective action**, once you have located the problem; a neat and permanent repair is a necessity. If possible, use original replacement parts to make repairs.

2.5. The last step is to **perform an operational check**; this is the most rewarding step in the troubleshooting process. If you do not prove your work, you will not know if the problem is solved. Remember, one malfunction can produce more than one problem.

Notice. This AFQTP is *NOT* intended to replace the applicable technical references nor is it intended to replace hands-on training. It is to be used in conjunction with these for training purposes only.

3. Generator Set. The MEP-012A is a trailer mounted generator set. The running gear assembly is a welded steel structure, which provides a base for the generator set and allows it to be mobile. Two hand levers at the front of the unit actuate the parking brakes manually. The MEP-012A also has surge brakes, which provide immediate braking action when the generator set is being towed. The actuator for the surge brakes consist of a hydraulic piston and cylinder located on the tow bar. As the tow vehicle slows, the forward movement of the generator set causes hydraulic pressure to build in the brake cylinder. This pressure is directed to two sets of brake clusters on the rear axles. Also, if the tow bar should become disconnected from the tow vehicle, the tow bar would fall to the ground causing the piston in the brake cylinder to be pushed in again creating a hydraulic pressure that is directed to the brake clusters. During backing of the generator set, the surge brakes must be blocked to prevent the brakes from actuating.

3.1. The MEP-012A has three axles. The two rear axles provide the major load carrying support for the generator set. The rear axles also contain the four brake clusters (one for each wheel). The front axle contains the steering aid tow bar, assemblies.

4. Engine. The engine is a Cummins, liquid cooled, 12 cylinder, four cycle, dual turbocharged and after cooled, " V" type diesel with a 2300 cubic inch displacement. The engine produces 1235 brake horsepower (BHP) at 1800 RPM and 1030 BHP at 1500 RPM. It has one camshaft for each bank of cylinders. Both camshafts are driven at half the speed of the crankshaft. The camshafts operate the intake and exhaust valves and the fuel injector.

5. Fuel System. The MEP-012A is designed to operate on a wide variety of fuels. These include JP-4, JP-5, JP-8, DF20 DFA (arctic grade diesel fuel), or commercial Jet A-1. Here are two fuel connections on the trailer, which connect the generator to the external fuel sources. These fuel connections accept a one-inch fuel hose from an external fuel manifold. Either of the two fuel sources may be selected using the fuel selector valve.

NOTE:

According to the manufacturer the MEP-12 can run on any type fuel; however, ensure you have the conversion kit installed when using other types of fuel.

5.1. From the fuel selector valve the fuel is routed through fuel solenoid valve L4. This solenoid- valve keeps fuel from siphoning into the generator set. Fuel is only allowed to pass through L4 when its coils energize. After the fuel passes through L4 it is routed through the fuel strainer. This is a wire mesh type strainer, which is designed to strain out contaminants that could damage the transfer pump.

5.2. After the fuel has been strained it goes to the fuel transfer pump. The function, of the fuel transfer pump is to fill the generator fuel tank (42 GAL. on board tank). It's a positive displacement, gear type pump that is driven by a 120 VAC electric motor. The float switches in the fuel tank control the starting and stopping of the motor.

5.3. The fuel tank has a capacity of 42 gallons. Float switches FS1 through FS4 are located inside the fuel tank. The float switches control the starting and stopping of the transfer pump motor and activate the low fuel alarm circuit.

Notice. This AFQTP is *NOT* intended to replace the applicable technical references nor is it intended to replace hands-on training. It is to be used in conjunction with these for training purposes only.

5.4. Fuel is drawn from the fuel tank to the fuel filters through a fuel shutoff valve. The fuel filters are spin on type filters, which filter out any small contaminants before the fuel enters the injection pump.

5.5. The MEP-012A uses a Cummins PT type fuel injection pump with a built in actuator. The injection pump is gear driven from the engines accessory drive assembly. The built in actuator L6 regulates the pressure output of the injection pump thereby regulating engine speed. The pressurized fuel from the injection pump is routed to the fuel manifolds through fuel shutoff solenoid, L3.

5.6. After the fuel passes through the PT pump it is routed to the fuel shutoff solenoid L3. L3 is located on the injection pump itself and when energized allows the fuel to flow from the pump. When L3 is de-energized the fuel supply leaving the injection pump is cut off causing the engine to shutdown. The fuel manifolds direct the fuel from the injection pump to the fuel port in the cylinder head. There are two fuel manifold sections for each cylinder bank. The fuel manifolds are located behind the intake manifolds. The fuel passes from the fuel manifold through drilled passages in the cylinder head into the fuel injector. The fuel injection valves or fuel injectors are located in each cylinder head. The engine camshafts through pushrods and rocker arms mechanically operate the injectors. Any fuel, which is not used by the injectors, is directed back to the fuel tank through a fuel return line.

5.7. The ether injection system is used to aid in starting the engine in cold weather. It contains an ether bottle injection solenoid, and copper tubing. A switch on the generator control panel controls the ether injection system. When the switch is moved up, the pressure chamber of the injection solenoid fills with ether. When the operator releases the switch, the ether in the pressure chamber of the solenoid is sent through the copper tubing into the air intake manifold. The ether injection system is only to be used during engine cranking,

6. Cooling System.

NOTE:

The MEP-012A is designed to run with the doors closed. This plays to factors depending on the season. During summer months with the access doors closed and louvers in the fully opened position, the air is drawn from inlets of the rear of the generator by the fan and directed over the engine and through the radiator. This action causes more air and vacuum through the radiator. During winter months with the access doors closed and the louvers partly close allows the engine reach normal operating temperature of 160 degrees or higher.

6.1. The MEP-012A uses a closed type cooling system. Coolant is circulated through the system by a centrifugal water pump, which is gear driven from the engine accessory drive. Coolant is circulated through the-engine where it picks up heat, then is directed through the radiator where the heat is dissipated to the atmosphere.

6.2. Sets of water conditioners, each containing two pH treated water filters are mounted to both thermostat housings. These water conditioners filter out contaminants in the coolant. They also treat the pH factor after coolant. Each set of water conditioners is equipped with a valve, which allows you to change the filter elements without draining the cooling system.

Notice. This AFQTP is *NOT* intended to replace the applicable technical references nor is it intended to replace hands-on training. It is to be used in conjunction with these for training purposes only.

6.3. The MEP-012A has total of four coolant thermostats, which regulate the coolant temperature. When-the unit is first started and the coolant temperature is low, the coolant is directed back to the engine. As the temperature of the coolant increases, the thermostats open, forcing the coolant to-pass through the radiator. The thermostats are located in the thermostat housings at the front of the engine. The radiator has a coolant capacity of 30 gallons. As the coolant passes through-the tubes of the radiator, air passes across the fins, and the heat is transferred.

7. Lubricating System. This is a pressure feed type-lubricating system where oil is directed to the internal components under pressure. This is a wet sump type system where the oil is stored in the engine oil pan. Oil is drawn from the engine oil pan by the oil pump. The oil pump is a positive displacement, gear type pump that is mounted to the block just below the crankshaft. It has a built in pressure regulator, (relief valve) which prevents excessive pressure.

7.1. The oil is filtered by a set of four oil filters. These are spin on type filters and remove contaminants, which would damage the internal engine components. The MEP-012A is also equipped with a set of by-pass filters. If the main oil filters become clogged, an automatic bypass valve would direct the pressurized oil through the bypass filters instead oil the main filters, preventing oil starvation. The bypass filters are also are the spin on type.

7.2. There are three oil coolers. They are located in the valley at the top of the engine, between the cylinder banks and submerged in the engine coolant. The oil passes through the core of the oil coolers.

7.3. There is a crankcase breather mounted on each side of the engine. The crankcase breathers vent the fumes that form in the crankcase to the atmosphere. They also prevent pressure from building in the crankcase, which could result in a potentially hazardous condition.

8. Intake Air System. The MEP-012A has an air intake filter located just before the inlet of each turbocharger. These air filters are -designed so that normal engine vibrations shake most of the dirt out of the filters. There is a flier service indicator on each filter, which shows the operator how much restriction is in the filter. Once this indicator indicates above 20 psig, the filter elements should be changed.

8.1. The MEP-012A has twin turbochargers to mechanically super the engine. Supercharging increases engine horsepower without increasing fuel consumption. This makes the unit more fuel efficient, producing more horsepower per gallon of fuel. Both turbochargers are identical units, which force pressurized air into a common after cooler assembly. The pressure of the engines exhaust gases drives the turbochargers. One turbocharger is mounted to each exhaust manifold.

8.2. As mentioned earlier, both turbochargers feed into a common after cooler assembly. The after cooler cools the intake air, which increases its density. This allows a greater volume of air to be drawn into the cylinder on the intake stroke. The after cooler function much like a radiator except radiator cools water with air, and an after cooler cools air with water. Inside the after cooler are two radiators like cores. Engine coolant is circulated through these cores and intake air is drawn across it. As the intake air passes the after cooler cores, heat is transferred from the air to the coolant. The after cooler also balances any pressure differences between the turbochargers, insuring that equal air pressure is directed to both intake manifolds. The intake manifold directs intake air from the after cooler into the intake ports of the cylinder heads.

Notice. This AFQTP is *NOT* intended to replace the applicable technical references nor is it intended to replace hands-on training. It is to be used in conjunction with these for training purposes only.

8.3. As the exhaust gasses leave the exhaust ports in the cylinder heads, it is collected by the exhaust manifolds and directed to the turbochargers. Each exhaust manifold is constructed in three sections to allow for heat expansion and contraction. The sections of the exhaust manifold slide into each other and a gas tight seal is created as the manifold heats up.

8.4. After the exhaust gasses pass through the turbocharger, it is directed through the exhaust pipes to the mufflers. The mufflers serve to reduce the noise of the exhaust gasses leaving the engine, and also help to maintain an even backpressure on the exhaust valves. Each muffler is equipped with a rain cap to prevent rain and other foreign objects from getting into the exhaust system.

9. Electrical Cables. The electrical cable system is broken down into three categories: remote, load, and grounding. The remote cables are by far the simplest part of the system. Remove the remote control panel from the generator set and place it into the equipment control rack, then connect the two remote cables from the generator set to the back of the control panel. The generator is now considered to be in the remote control position. This means that the generator can be started from within the protective dwelling.

9.1. The load cables consist of the primary and secondary cables. The primary cables are broken into two different runs. One run from the generator set to a primary electrical distribution center and the second from a primary electrical distribution center to the SDC. There are two considerations when making these runs; first, the location of the primary electrical distribution center and the second is the location of the SDC. In most cases, the primary run from the generator to a primary electrical distribution center should not exceed 25 feet.

9.2. The reason the primary run is short, is because there is no ground fault protective devices between the two. In regards to the location of the SDC, the main concern is voltage drop in extremely long runs. All phase connections between these three pieces of equipment are made with load break connections. You must insure that these connections are secure and tight. Also insure that phase sequencing is correct for all equipment in the system.

9.3. The secondary cables will all run from the SDC. The SDC is a step down transformer that takes 4160 and transforms it to 120/208. The secondary cables, which are the cannon plug type, run from the SDC to the load. The load can be an air conditioning unit, remote area lighting sets, or shelters. Each SDC has the capability of running two other SDCs; and each of those SDCs can run two SDCs. You must not overload the primary electrical distribution center circuit or the generator capability. In most cases there will be an interior and exterior electrician assigned to a bare base to make these runs.

9.4. The grounding cables are broken into two categories: the individual equipment grounding and the triangular common bus grounding. The individual from equipment grounding consists of using a grounding wire or grounding strap from each piece of equipment to an eight foot grounding rod driven into the ground. The triangular common bus ground will connect the generator, the primary electrical distribution center, and the SDC together. This is done by running a grounding cable from each of the prospective grounding rods of the generator, primary electrical distribution center, and SDC in a loop configuration. This will prevent any static charges throughout the system.

Notice. This AFQTP is *NOT* intended to replace the applicable technical references nor is it intended to replace hands-on training. It is to be used in conjunction with these for training purposes only.

NOTE:

Some places do not use the loop configuration because it was found be a link to majority of outages due to ground faults. Use an independent PDC ground system; therefore if one PDC has a ground fault it will effect the other PDC at that plant.

10. Fuel Lines. The fuel system consists of three different parts, the fuel source, fuel lines, and generator. Your fuel source could be a fuel bladder, a fuel truck, or a fuel tank depending on the available resources. Keep in mind that the fuel source outlet should be the three-inch quick disconnect type. Once the fuel source is in position, supply lines can be connected. These consist of 25-foot sections of three-inch line from the fuel source to the fuel manifold. These will also be the quick disconnect type. The fuel source should be a minimum of 100 feet from the generators.

10.1. After laying out the proper amount of three-inch fuel lines, connect them to a fuel manifold. This manifold has 2 three-inch connections and 2 one-inch connections. Connect the three-inch fuel line to one of the three-inch connections of the manifold. Then connect this fuel manifold with another fuel manifold, and cap off the other three-inch connection.

10.2. Using the one inch threaded fuel lines, also in 25-foot sections, make two fuel line runs from the manifold to the generator. Each generator has the capability of receiving two fuel lines. In most cases one fuel line will be coming from a fuel source and the other from a backup fuel source. With the fuel supply and lines installed, make sure that all the connections are secure and tight. When working with the three inch quick disconnect; always use safety wire to secure the connection. With the threaded one-inch line, just make sure the connection is good and tight.

10.3. The whole system has several valves incorporated in it. The fuel source itself may have some type of valve depending on the type of fuel source available. The fuel manifold has two in line valves for fuel flow direction. The generator also has a selecting valve for fuel source #1 or #2. All of these valves should be set to allow fuel to flow from the primary fuel source to the generator. The backup fuel source should be hooked up, but in the standby mode in case you lose your primary source of fuel.

11. MEP-12 Electrical Circuits Sequence Of Operations:

11.1. Engine 700 RPM Circuit. When the engine reaches 700 RPM the two sets of contacts on the engine speed switch, SS1, will reconfigure. When the normally open contacts close, the coil of governor relay, K32, will be energized causing its two sets of normally open contacts to close allowing 24 VDC to pins 1 and 4 of governor control unit, A4. A path is also completed through the closed contacts of K13 to the coil of oil pressure time delay relay, K20. If the engine oil pressure fails to build to a point to open low oil pressure shutdown switch, S14, before K20 times out, the coil of low oil pressure fault relay, K27, will be energized which will energize the low oil pressure fault circuit.

11.1.1. When the normally closed contacts of SS1 open, the coil of relay K12 is de-energized causing its three sets of contacts to reopen. This causes the field flash circuit of A3 and the coils of K10 and K11 to be de-energized, which in turn cause L1 and L2 to be de-energized, shutting off the starter motors.

Notice. This AFQTP is *NOT* intended to replace the applicable technical references nor is it intended to replace hands-on training. It is to be used in conjunction with these for training purposes only.

11.1.2. When the engine oil pressure reaches the point to open engine oil pressure switch, S15, low oil pressure lamp, DS5, will be de-energized.

11.1.3. When the output of battery charging alternator, G1, reaches the point to activate the coil of alternator relay, K29, its contacts will, open causing battery charger lamp, DS17, to be de-energized.

11.2. Run Circuit. When S2 is released to the RUN position, the coil of idle, start relay, K30, is de-energized. This causes its normally open contacts to reopen. When this happens the path between pins 7 and 10 of governor control unit; A4 is opened, which causes the engine to accelerate to rated speed. The K30 holding circuit is also released at this time. It also closes its normally closed contacts in the AC circuit to allow AC voltage to AC, voltage regulator, A3.

11.3. Shutdown Fault Circuits. The following circuits are the fault circuits that will trip the output circuit breaker and shut down the unit if they should occur. They include the high water temperature circuit, low oil pressure circuit, overspeed circuit, and overvoltage circuit. Each of these circuits are discussed in detail in the following paragraphs.

11.4. High Water Temperature Circuit. During normal operation, a positive voltage flows from the battery charging alternator, G1, or control battery, BT1, through maintenance switch, S19, and DC circuit breaker, CB1. From CB1, the positive voltage continues through the closed contacts of system run relay, K13, through CR1 to the water temperature alarm switch, S16. As the water temperature increases above 208 F (±2 F), S16 closes, allowing current to flow through CR10 to illuminate the high water temperature lamp, DS6.

11.4.1. The positive voltage from CB1 flows through annunciator reset switch, S7, and annunciator test switch, S8, to the high water temperature shutdown switch, S17. As soon as the water temperature increases above 217 F (±2 F), S17 closes. This allows current flow through the coil of high water temperature annuciator relay, K5. One set of K5 normally open contacts will close to keep the coil of K5 energized. A second set of K5 normally open contacts will close and keep DS6 illuminated. When S17 closes, current flows through D15, D16, normally closed contacts of lamp test relay, K23, and battle short switch, S4, to energize the coil of shut down relay, K16.

11.4.2. Once K6 is energized by one of the shut down faults, one set of K16 normally open contacts will close. This will keep the coil of K32 energized during shutdown and keep the engine from going to full fuel prior to shutting down.

11.4.3. Once K6 is energized by one of the shut down faults two sets of K16 normally close contacts will open. This causes the coil K32 energize during shutdown and keep the engine from going to full fuel prior to shutting down.

11.4.4. Another set of K16 normally closed contacts will open to de-energize the coils of circuit breaker close relay, K14, and system run relay, K13. When the coil of K14 is de-energized, the K14 normally open contacts will reopen to de-energize the coil of load circuit breaker, CB5, which causes its main contacts to open. When the coil of K13 is de-energized, one set of K13 normally open contacts will reopen to de-energize fuel shutdown solenoid, L3. This will cause the engine to shut down.

Notice. This AFQTP is *NOT* intended to replace the applicable technical references nor is it intended to replace hands-on training. It is to be used in conjunction with these for training purposes only.

11.5. Low Oil Pressure Circuit. During operation, a positive DC voltage from BT1 or G1 is applied through S19, CB1, one set of normally closed K13 contacts, and CR19 to the low oil pressure alarm switch, S15. Positive DC is also applied to the low oil pressure shutdown switch, S14, through a set of normally closed K16 contacts and speed switch, SS1. When the engine oil pressure falls to 39-+2 psi, S15 closes. This allows current to flow through CR5 to the low oil pressure lamp, DS5.

11.5.1. If the engine oil pressure continues to fall to 30 +2 psi, S14 will close allowing current to flow through the closed contacts of time delay relay, K20, to the coil of the low oil pressure fault relay, K27. When the coil of K27 is energized, its normally open contacts close. This allows current to flow from CB1 through S7, S8 and the closed contacts of K27 to the coil of the low oil pressure annunciator relay, K7. When the coil of K7 is energized, one set of normally open contacts will close keeping the coil of K7 energized. At the same time, a second set ofK7 normally open contacts will close to allow current to flow through the low oil pressure lamp, DS5, even if the fault no longer exist. Also, when the normally open K27 contacts close, current flows through D13, D14 and S4 to the shutdown relay, K16. From this point the same events occur as they did when K16 was energized in the high water temperature fault circuit.

11.6. Over Speed Circuit. During operation, DC voltage from BT1 or G1 is supplied through S19, CB1, S7, and S8 to speed switch SS2. If the engine speed exceeds 2060, +/-50 RPM, the normally open SS2 contacts will close. This allows current to flow through the SS2 contacts to the coil of the overspeed fault annunciator relay, K9. When the coil of K9 is energized, one set of its normally open contacts will close keeping the coil energized. A second set of K9 contacts will close allowing the coil of shutdown relay, K16, to be energized. These contacts allow the engine to shutdown even if the battle short switch, S4, is turned 'ON'.

11.6.1. Also, when the SS2 contacts close, current will flow through D17 to the over speed lamp, DS8, through D18, the closed contacts of K28, and S4 to the coil of K16. From this point the same events occur as they did when K16 was energized in the high water temperature fault circuit.

11.7. Over Voltage Circuit. During operation of the generator set, 2400 VAC is applied to the primary side of transformers, T4, T5, and T6 through fuses, FI, F2, and F3. 208 VAC from the secondary sides of T4, T5, and T6 is applied through fuses F4, F5, and F6 to pins 1, 2, and 3 of over voltage relay, K23, if the voltage at K23 exceeds 239 +5 VAC (4780 +/-100 VAC generator volts), the normally open contacts of K23 will close. This allows current to flow from a BT1 or G1 through S19, CB1, S7, S8 and the closed contacts of K23 to the coil of the over voltage annunciator relay, K5.

11.7.1. When the coil of K5 is energized its normally open contacts will close keeping the coil of K5 energized. At the same time, current flows through the closed contacts of K23 and D9 to the over voltage lamp, DS9. Current will also flow through D10, the closed contacts of K28, and S4 to energize the coil of shutdown relay, K16. From this point on events occur as they did when K16 was energized in the high water temperature fault circuit.

Notice. This AFQTP is *NOT* intended to replace the applicable technical references nor is it intended to replace hands-on training. It is to be used in conjunction with these for training purposes only.

11.8. Circuit Breaker Trip Faults. These faults only open the output circuit breaker. The engine will continue to run if any of these faults should occur. They are the ground fault circuit, reverse power circuit, over current circuit, and blown fuse circuit, which will be discussed in the following paragraphs.

11.8.1. Ground Fault Circuit. Any current flow between the neutral phase of the generator and ground indicates a ground fault. Current transformer, CT4, will detect this current flow. The output of CT4 is applied to pins 3 and 4 of the ground fault relay, K22. If a ground fault condition exists, the normally open contacts of K22 will close. This allows current to flow from BT1 or G1 through S19, CB1, S7, S8, and the closed K22 contacts to the coil of the ground fault annunciator relay, K4. When the coil of K4 is energized, its normally open contacts will close to keep the coil of K4 energized even if the fault no longer exists. At the same time current will be allowed to flow through DS to illuminate the ground fault lamp, DS10. At this time current will also flow through DS to the coil of the circuit breaker open relay, K15.

11.8.1.1. When the coil of K15 is energized, its normally closed contacts will open which will cause the coil of the circuit breaker close relay, K14, to be de-energized. When this happens, the normally open contacts of K14 will reopen and de-energize the coil of the load circuit breaker, CB5. When the coil of CB5 is de-energized, it will open its contacts, which disconnects the generator set from the load.

11.8.2. Reverse Power Circuit. During generator set operation, current transformer, CT2, is supplying generator current signals to terminals 5 and 6 of the reverse power relay, K24. If a reverse power condition is sensed by K24, it will close its normally open contacts. This will allow current to flow from BT1 or G1 through S19, CB1, S7, S8, and the closed contacts of K24 to the coil of the reverse power annunciator relay, K3. When the coil of K3 is energized, its normally open contacts will close keeping K3 energized even if the fault no longer exists. At the same time current will flow through D5 to illuminate the reverse power lamp, DS11. Current will also flow through D6 to the coil of the circuit breaker open relay, K15. From this point the same events occur as they did when K15 was energized in the ground fault circuit.

11.8.3. Overcurrent Circuit. During generator operation, current signals from current transformers, CTI, CT2, and CT3 are applied to the overcurrent relay, K25. Once the current on the generator exceeds 130% of its rated capacity, the normally open contacts of K25 will close. This allows current to flow from BT1 or G1 through S19, CB1, S7, S8 and the closed contacts of K25 to the coil of the overcurrent relay, K2. When the coil of K2 is energized, its normally open contacts will close allowing the coil to remain energized, current flows through D3 to the overcurrent lamp, DS12. Current also flows through D2 to the coil of the circuit breaker open relay, K15. From this point events occur as they did when K15 was energized in the ground fault circuit.

11.8.4. Blown Fuse Circuit. If output fuse, F19, F20, or F21 blows, a blown fuse indicator button, located in the fuse itself, will pop up closing one set of contacts in the blown fuse indicator switch, S24. If any of the S24 contacts close, current will flow from BT1 or G1 through S19, CB1, S7, S8, and the closed contacts of S24 to energize the coil of the blown fuse annunciator relay, K1. When the coil of K1 is energized, its normally open contacts will close keeping the coil energized.

Notice. This AFQTP is *NOT* intended to replace the applicable technical references nor is it intended to replace hands-on training. It is to be used in conjunction with these for training purposes only.

11.8.4.1. At the same time the coil of K1 is energized, current will flow through D1 to the blown fuse indicator lamp, DS13. Current will also flow through D2 to the coil of the circuit breaker open relay, K15. From this point events occur as they did when K15 was energized in the ground fault circuit.

11.9. High Voltage Compartment Door Circuit:

11.9.1. Miscellaneous Circuits: There are several other circuits that make up the MEP-012A electrical system. Although it is not feasible to discuss all of them, we will cover several in the following paragraphs. These include the low fuel level alarm circuit, automatic and manual fuel transfer pump control circuits, the synchronizing circuit, and the circuit breaker close and open circuits.

11.9.1.1. Low Fuel Level Alarm Circuit. During operation, positive DC voltage is supplied through S19 and CB1 to float switch, FS4, located in the fuel tank. If the fuel level in the tank drops to the point where FS4 closes, current flows through FS4 to the coil of the low fuel-warning relay, K18. When the coil of KI5 is energized, its normally open contacts will close allowing current to flow through CRI2 to illuminate the low fuel level lamp, DS7. At the same time, current flows through the normally closed contacts of K19 to energize alarms LS1 and LS2.

11.9.1.1.1. When the alarm silence switch, S6, is depressed, current flows through to the coil of the alarm silence relay, K19. When the coil of K19 is energized, its normally open contacts close, which allows current to flow through CR20 to keep the coil of K19 energized. At the same time, the normally closed' contacts will open de-energized LS1 and LS2. The low fuel level lamp, DS7 will remain illuminated until the low fuel condition no longer exists.

11.9.2. Automatic Fuel Transfer Pump Control Circuit. Float switches, FS2 and FS3, are located in the generator set fuel tank. When the fuel level in the generator set fuel tank is normal, the contacts of FS2 are closed and the contacts of FS3 are open. As the fuel level in the tank drops, FS3 will close allowing DC current to flow from BT1 or G1 through S19, CB1, fuel transfer pump switch, S20, and the closed contacts of FS3 to one side of the coil of the automatic fuel pump control relay, K17. Once the time delay relay, K33, times out, the coil of K17 will be energized. FS3 must stay closed for 5 to 10 seconds before K33 will time out. This prevents short cycle times of the pump motor, caused by FS3 bouncing open and closed due to normal engine vibrations. When the coil of K17 is energized, one set of its normally open contacts will close allowing the coil of K17 to remain energized through the closed contacts of FS2. This prevents the transfer pump from shutting off as soon as FS3 reopens. Another set of normally open K17 contacts will close allowing the coil of the auxiliary fuel pump control relay, K31 to be energized.

11.9.2.1. When the coil of K31 is energized, its normally open contacts (located in the AC electrical system) will close. 2400 VAC is applied through fuses, F18 and F23, to the primary side of transformer, T3.

11.9.2.2. At the same time, AC voltage from "B" phase of the bus is applied through another set of S9 contacts to the bus side of sync light, DS15. AC voltage from "A" phase of the generator is applied through another set of S9 contacts to the generator side of DS14 and to terminal 2 of M10. A fourth set of S9 contacts allow AC voltage from "B" phase of the generator to flow through resistor, R7, to the generator side of DS15. Terminals 3 and 5 of M10 are connected to the neutral phase of the bus and the generator set.

Notice. This AFQTP is *NOT* intended to replace the applicable technical references nor is it intended to replace hands-on training. It is to be used in conjunction with these for training purposes only.

11.9.2.3. Any difference in potential between "All phase of the generator and "A" phase of the bust will cause current flow through DS14 causing the lamp to illuminate. The greater the difference in potential, the brighter the lamp illuminates. This difference in potential will also cause the needle of M10 to rotate. The higher the difference in potential between the generator and the bus, the farther the needle of M10 will move from the 12 o'clock position. When there is no difference in potential, the needle of M10 will point to 12 o'clock (straight up) position.

11.9.2.4. As with DS14, any difference in potential between "E" phase of the generator and "B" phase of the bus will cause current to flow through DS15. If the output cables of the generator set are connected correctly, DS14 and DS15 should illuminate at the same time. If they alternate, it is an indication that the phase sequence between the incoming generator and the bus is not correct.

11.9.2.5. A fifth set of S9 contacts is located in the DC electrical system. When these contacts close, DC voltage flows from BT1 or G1 through S19, CB1, system run relay, K16, engine control switch, S2, and the closed S9 contacts, to the contacts of the circuit breaker control switch, S10. Once the generator set and the bus are in phase and at the same voltage, there will be no difference in potential in the sync check relay, K21, and it will close its normally open contacts. When the operator moves the circuit breaker control switch, S10, to the close position, and if the K21 contacts are closed, DC current will flow through the S10 contacts, K21 contacts, and the closed K15 contacts to energize the coil of the circuit breaker close relay, K14.

11.9.3. Circuit Breaker Close Circuit. When the generator set is operating, 2400 VAC is applied to the primary side of transformer, T3, through fuses, F18 and F23. 120 VAC from the secondary of T3 is applied to the load circuit breaker control switch, S10, to the open contacts of K14. 24 VDC from BT1 or G1 through S19, CB1, and the normally closed auxiliary contacts of the load circuit breaker, CB5, and CR4 will energize the green circuit breaker open lamp, DS3.

11.9.3.1. Before CB5 can close, the sync switch, S9, must be moved to the ON position. This causes its normally open contacts to close. When the operator moves the circuit breaker control switch, S10, to the CLOSED position, 24 VDC flows through the closed contacts of K16, engine control switch, S2, the closed S9 contacts, the closed contacts of S10 the closed contacts of K21 (see the synchronizing circuit), and the closed contacts of K15 to the coil of the circuit breaker close relay, K14.

11.9.3.2. When the coil of K14 closes, 120 VAC flows through the closed K14 contacts to one side of an internal rectifier in CB5. The other AC input to the rectifier is from the secondary of T3 through a fuse in CB5. With AC now available at CB5's rectifier, DC flows to the coil of CB5 causing it to close its main contacts, which connects the generator to the load. As CB5 closes, its normally closed auxiliary switches will open and its normally open auxiliary switches will close. This will interrupt current flow through DS3 and allow current flow through CR6 to the red circuit breaker closed lamp, DS4.

Notice. This AFQTP is *NOT* intended to replace the applicable technical references nor is it intended to replace hands-on training. It is to be used in conjunction with these for training purposes only.

11.9.4. Circuit Breaker Open Circuit. When the operator moves the circuit breaker control switch, S10, to the OPEN position, S10 will close a set of normally open contacts, which are in line with the coil of the circuit breaker open relay, K15. This allows current flow from BT1 or G1 through S19, CB1, S7, S8, and the closed S10 contacts to energize the coil of K15. When this happens, the normally closed contacts of K15 will open which will de-energize the coil of the circuit breaker close relay, K14.

11.9.4.1. When K14 is de-energized, its normally open contacts will reopen, interrupting current flow to the rectifier of CB5. With the current flow to the rectifier in CB5 is interrupted, the DC output of the rectifier to the coil of CB5 will stop. This causes the main contacts of CB5 to move to the open position, disconnecting the generator from the load. As the main contacts of CB5 open, its normally closed contacts will close and its normally open contacts will reopen. This will stop current flow through the red circuit breaker close Lamp, DS4, and allow current flow to the green circuit breaker open lamp, D53.

12. Complete the following AFQTPs:

12.1. AFQTP 3E0X2 Module 12, 1 Aug 02: *AFSC Specific Publications*.

12.2. CD-ROM AFQTP 3E0X2 Electrical Power Production, Version 1.0, Nov 97: *750 Kilowatt (KW) Generator (MEP-12)* for detailed instruction on conducting start procedures for the 750KW generator. ***After completing the CD-ROM AFQTP see your Unit Education and Training Manager to take the <u>mandatory</u> CerTest # 8027, 750 QTP, Lesson 5. Trainee must score at least 80% to meet the minimum completion requirements for diamond tasks.***

NOTE:
The review questions for this material are in the above-mentioned CD-ROM.

13. If the equipment is available, then perform the following steps:

NOTE:
Trainer/Certifier must provide equipment and scenarios for troubleshooting engine systems, high and low voltage systems in order to complete these tasks.

Step 1: Locate TO 35C2-3-474-1: *Generator Set, Diesel Engine Driven, Wheel Mounted 750 KW*.

Step 2: Conduct troubleshooting IAW TO 35C2-2-474-1, Chapter 4, Section V, Paragraph 4-9, Table 4-3.

Step 3: Use five step process in troubleshooting.

3.1. Perform an operational check.
3.2. Analyze the malfunction.
3.3. Locate the malfunction.
3.4. Perform corrective action.
3.5. Perform an operational check.

Step 4: Document maintenance on AF Form 719.

Notice. This AFQTP is *<u>NOT</u>* intended to replace the applicable technical references nor is it intended to replace hands-on training. It is to be used in conjunction with these for training purposes only.

TROUBLESHOOTING ENGINE SYSTEMS, HIGH, AND LOW VOLTAGE

PERFORMANCE CHECKLIST

NOTE:
Trainer/Certifier must provide equipment and scenarios for troubleshooting engine systems, high and low voltage systems in order to complete these tasks.

INSTRUCTIONS:

The trainee must satisfactorily perform all parts of the task without assistance. Evaluate the trainee's performance using this checklist.

DID THE TRAINEE….?	YES	NO
Troubleshooting Engine System		
1. Have the equipment and scenario provided to perform task		
2. Perform an operational check		
3. Analyze the malfunction		
4. Locate the malfunction		
5. Perform corrective action		
6. Perform an operational check		
7. Document maintenance on AF Form 719		
8. Comply with all safety requirements		
Troubleshooting High Voltage		
1. Have the equipment and scenario provided to perform task		
2. Perform an operational check		
3. Analyze the malfunction		
4. Locate the malfunction		
5. Perform corrective action		
6. Perform an operational check		
7. Document maintenance on AF Form 719		
8. Comply with all safety requirements		
Troubleshooting Low Voltage		
1. Have the equipment and scenario provided to perform task		
2. Perform an operational check		
3. Analyze the malfunction		
4. Locate the malfunction		
5. Perform corrective action		
6. Perform an operational check		
7. Document maintenance on AF Form 719		
8. Comply with all safety requirements		

FEEDBACK: Trainer should provide both positive and/or negative feedback to the trainee immediately after the task is performed. This will ensure the issue is still fresh in the mind of both the trainee and trainer.

Notice. This AFQTP is *NOT* intended to replace the applicable technical references nor is it intended to replace hands-on training. It is to be used in conjunction with these for training purposes only.

LESSON LEARNED ON MEP-12A GENERATOR SET

1. Cleaning of high voltage electrical connections on Primary Distribution Center (PDC) and load bushings on Mobile Emergency Power (MEP-12) Generators cannot be over emphasized. Cleaning and inspection of load break elbows, high voltage bushings on both generator and PDC must be accomplished on a regular basis, suggested every 6 months, or when the accumulation of dirt is excessive. Elimination of Grime build-up has proven to reduced current tracking from phase to ground which dramatically reduces random ground fault conditions causing base-wide power outages. Plant Foreman will have to coordinate with Electrical Foreman to arrange scheduled power outages to perform cleaning and inspections. Work all scheduled power outages through the Chief of Operations. Also the protective plastic caps should be used for the load bushings when not connected to the generator, this will keep dirt and grime from building up and causing future problems.

2. Unit radiators must be cleaned weekly to ensure proper operation of cooling system, if not then unit output will be reduced by 50%. Use simple green Product and steam/pressure washer to clean radiators and the rest of the generator. Pressure washers for cleaning units must be kept up with regular maintenance and ensure the plant Ops section always has an extra pressure washer incase one breaks down. As of 6 may, six pressure washers are on order from the sates for the plants. Each plant has a water storage tank, which must be kept clean by using a lid for the top of the water storage tank. Keeping sand out of the tank will reduce mechanical breakdown of pressure washer pumps.

3. Electrical ground for the MEP-12 system are extremely important. Each unit must be grounded separately with a minimum resistance reading of 25 Ohms. To ensure you get the required resistance readings the grounding rod area must be saturated 3 times daily. Develop a water reservoir to ensure water goes down around ground rod and not outward. Ground wire to generator and to ground rod must be inspected and cleaned with a wire brush regularly to remove corrosion. Inspect ground tightness on generators every 300 Hours

4. Control cables are known to be the root problem of many faults. Cables should be cleaned regularly with contact cleaner and then use a small amount of WD-40 on threaded areas when reconnecting cannon plug fixtures. Keep cables elevated above ground so when heavy rains arrive in the spring the control cable cannon plugs are not in standing water. Currently we are investigating project to manufacture customized control cables, fit to length for each unit, which will allow control cables to be buried, and not expose cannon plug connections to excessively harsh environment. Cannon plug connections to the generator itself should be tighten weekly due to excessive vibration on MEP-12 Unit.

5. If MEP-12's are operating in Parallel and a ground fault is indicated and can be reset immediately on only one unit then this may indicate that a loose connection is somewhere on the high voltage side either in the CB5 assembly or on of the transformers. Strongly recommended that regular maintenance be performed on CB5's and all high voltage accessories every three months due to excessive vibration. If a ground fault appears on all units supporting a PDC at the same time and all reset then this will indicate a potential problem in the distribution system past the PDC. IF a ground fault does not reset then obviously there is a problem with the distribution past the PDC.

Notice. This AFQTP is *NOT* intended to replace the applicable technical references nor is it intended to replace hands-on training. It is to be used in conjunction with these for training purposes only.

6. The CB5 vacuum contactor is an XB3 item, however parts can be purchased through an AF Form 9 to obtain replacement components. The CB5 cost over $2,554.00 and can be repaired for much less then that. Usually the problem is in the wiring harness or vacuum tubes. Part information is found in the file cabinet in a folder entitled Vacuum Contactor. CB5's and control cables can be tested for loose connections by keeping a record of ground faults that appear while paralleling units together.

7. A 750 KW resistive load bank is on order for maintenance purposes, the use of this load bank is important to eliminate the need to troubleshoot units while connected to the customer load.

8. Bulk material to manufacture Fuel and oil by-pass lines must be kept on-hand in supply. When a hose needs to be made contact the hydraulics shop and they will put together hoses since they have the necessary equipment to do properly. Oil by-pass lines frequently get hard and unserviceable, suggested that you regularly replace these lines every 1,000 hours of unit operation.

9. K-22 ground fault relays are not factory set at prescribed requirements of the T.O. Only the relays with the paint covering the setscrew adjustment cover have been pre-set. Adjustment for this relay must be made with an SR-76 test stand. A test stand is on order, when it arrives a representative from GRF should be contacted and sent to PSAB to instruct Power Plant personnel on proper usage of this device.

10. If a generator control problem exists, take control to unit itself and test again to determine if you have a bad control cables, otherwise continue to troubleshoot regularly.

11. No output voltage or frequency- Check all fuses and surge suppresser on rotating rectifier assembly CR5 (be sure to disconnect unit from PDC and ground all components).

12. No Voltage in Automatic position- Check fuses, and then inspect Voltage Regulator.

13. Missing phase - check fuses and reset load break elbow connections.

14. Power factor meter, wattmeter, and ammeter all fluctuating look for loose load cables and control panel grounds.

15. Circuit breaker closed light will not light - CB5 auxiliary contact out of alignment.

16. One phase of voltage normal, other two low check fuses in line with T4-T9 transformers or voltage regulator selector switch is bad.

17. Unit cranks but will not start - if fuel is getting to pump but not putting out, solenoids L3 or L6 is bad or pump itself is bad; make sure you have the right LG, there are two types.

18. Unit frequency fluctuating- possible bad elbow on mechanical speed switch, A4 or magnetic pickup.

19. If amps are low on any phase then possible a bad current transformer.

Notice. This AFQTP is *NOT* intended to replace the applicable technical references nor is it intended to replace hands-on training. It is to be used in conjunction with these for training purposes only.

20. If synch. Lights are not lighting up at the same time check fuses 15, 16 & 17 and load connections to PDC and from Generator.

21. CB5 will not close the possible bad T3, test by checking voltage at the outlets. Also check CB4 to make sure it is not tripped; on T3 check F18 and 23.

22. S2 is not getting DC voltage, possible bad K12, K12 socket, or bad CR1 diode.

23. If voltage wont adjust or keeps blowing fuses in the regulator (in Auto Position) check possible bad regulator.

24. Oil and water temp not reading - check sending units and ensure control panel are grounded.

25. Fuel wont pump to day tank in Auto position - check CB6 to see if its tripped, check fuel solenoid L4 or if day tank over flows when the unit is not running the L4 is stuck open.

26. Generator voltage acting erratically - check control battery connections for a bad terminal.

27. Unit continuously ground faults - check tightness of K22 and control cables and load cables and inspect the CB5 for loose connections.

28. Unit frequency is erratic check out L6 (fuel Solenoid) to make sure its operating properly or could be a bad fuel pump.

29. Amp meter reading high or low on-line check G1 CT2 or CT3 for that particular phase.

30. If unit will not turn over, first check start cart for 24-26 VDC. When you put the stop-run-start switch in start position and no response check K12 if putting out DC Volute.

31. Lights go dim when start switch is in the start position, then there may be a short in the control cables or connectors.

32. CB5 will not close but T3 is supplying voltage, bad CB5 or is unit trips off line after being on-line after a few minutes.

33. If you have high voltage on buss side when disconnected from PDC, your CB5 is bad (bleeding voltage through the contacts) also check the auxiliary contact they may need adjustment.

Notice. This AFQTP is *NOT* intended to replace the applicable technical references nor is it intended to replace hands-on training. It is to be used in conjunction with these for training purposes only.

MOBILE AIRCRAFT ARRESTING SYSTEM (MAAS)

PERFORM UNIDIRECTIONAL INSTALLATION

MODULE 28 **AFQTP UNIT 2**

POSITION TRAILERS (28.2.2.2.)

Notice. This AFQTP is *NOT* intended to replace the applicable technical references nor is it intended to replace hands-on training. It is to be used in conjunction with these for training purposes only.

POSITION TRAILERS

Task Training Guide

STS Reference Number/Title:	28.2.2.2., Position trailers (MAAS).
Training References:	1. 35E8 series Technical Orders (TOs): 1.1. TO 35E8-2-1-101, USAF Aircraft Arresting Systems. 1.2. TO 35E8-2-10 Series/Work-cards, MAAS Operation and Service. 2. TO 38G2-89 Series, Wisconsin Engines. 3. Career Development Course (CDC) 3E052B Volume 3, Unit 6: *Mobile Aircraft Arresting System.* 4. AFI 32-1043, *Management of Aircraft Arresting Systems*. 5. CD-ROM Air Force Qualification Training Package (AFQTP) 3E0X2 Electrical Power Production, Version 1.0, Nov 97: *Mobile Aircraft Arresting System (MAAS).* 6. CD-ROM AFQTP 3E0X2 Electrical Power Production, Version 1.0, Mar 99: *Power Production, Tools, and Test Equipment.* 7. Local Procedures.
Prerequisites:	1. **Possess as a minimum a 3E032 AFSC.** 2. **Review the following references:** 2.1. Review CDC 3E052B Volume 3, Unit 6. 2.2. 35E8 series TOs. 2.3. 38G2-89 series TOs. 2.4. CD-ROM AFQTP 3E0X2 Electrical Power Production, Version 1.0, Mar 99: *Power Production, Tools, and Test Equipment.* 3. **Complete** CD-ROM AFQTP Electrical Power Production, Version 1.0, Nov 97: *Mobile Aircraft Arresting System (MAAS).*
Equipment/Tools Required:	1. Computer to support AFQTP CD-ROMs. 2. Applicable technical references. 3. MAAS. 4. Personal safety equipment. 5. General tool kit.
Learning Objective:	Identify site preparation procedures.
Samples of Behavior:	1. Trainee will be able to: 1.1. Position the trailer. 1.2. Prepare the trailer for lowering. 1.3. Lower the trailer.
Notes:	
1. To successfully complete this element follow the steps outlined in the applicable technical manual exactly--no exceptions. 2. Any safety violation is an automatic failure.	

Notice. This AFQTP is *NOT* intended to replace the applicable technical references nor is it intended to replace hands-on training. It is to be used in conjunction with these for training purposes only.

POSITION TRAILERS

1. Background. The Mobile Aircraft Arresting System (MAAS) is an air transportable rapid installation emergency system. The MAAS consists of two identical mobile units; each unit houses one BAK-12 rotary friction energy absorber. It also contains all the basic components of a fixed base arresting system, all the tools, and hardware necessary for quick installation and removal. The key to this system is how fast it can be deployed and installed.

2. Complete the CD-ROM AFQTP 3E0X2 Electrical Power Production, Version 1.0, Nov 97: Mobile Aircraft Arresting System (MAAS) for detailed instruction on the positioning trailers. ***After completing the CD-ROM AFQTP see your Unit Education and Training Manager to take the mandatory CerTest # 8011, MAAS QTP, Lesson 2. Trainee must score at least 80% to meet the minimum completion requirements for diamond tasks.***

> **NOTE:**
> The review questions for this material are in the above-mentioned CD-ROM.

3. If the equipment is available, then perform the following steps:

3.1. POSITION THE TRAILERS.

Step 1: Determine the direction that the aircraft will land.

Step 2: Locate a point on the runway centerline allowing 990 ft for run out to stop the aircraft. At this point (Point "A"), the pendant will be located.

Step 3: Locate Point "B" from "A" and perpendicular to the runway centerline at a distance: Distance (B to A) = cable length + 15 ft/2.

> **NOTE:**
> Although the points are different, this is the same formula as before.

Step 4: Locate Point "C" from "A" and perpendicular to the runway centerline. The distance from "A" will be: Distance (C to A) = cable length + 15 ft.

Step 5: Clear the tape sweep area and the MAAS installation area of any obstructions such as lights, stones, or any other sharp objects. The minimum tape sweep area is defined by lines from "B" and "C" to a Point "D" located on the landing zone centerline 990 ft from Point "A" in the direction of run out.

Step 6: Once the MAAS trailers are at the installation site, locate one unit on each side of the runway at Points B and C with the runway edge sheaves facing toward the runway centerline.

Step 7: Set the trailer parking brake and disconnect the trailer from the prime mover.

Step 8: Remove the trailer cover and store when time permits.

Notice. This AFQTP is *NOT* intended to replace the applicable technical references nor is it intended to replace hands-on training. It is to be used in conjunction with these for training purposes only.

Step 9: Remove the runway edge sheave guard and store when time permits.

SAFETY:

INSURE THE AREA UNDER THE TRAILER IS CLEAR AND INSTRUCT PERSONNEL TO REMAIN CLEAR OF THE TRAILER DURING THE RAISE OR LOWER OPERATION.

NOTE:

When a soil installation is evident, remove the nine moil points, bushings, and the rear stake storage bracket. Store when time permits.

Step 10: Lower the trailer to the ground following the procedure outlined in Paragraph 4-4.6.2. During this operation, the trailer can be stopped before contacting the ground and repositioned to insure proper alignment.

Step 11: Once the trailers are lowered into position, remove the tape connector from its stored position.

Step 12: Proceed with the appropriate type anchor installation. There are four possible installation methods. They consist of the following possibilities:

12.1. Any combination of these four basic installation modes may be utilized depending on the condition of the runway surface.

12.1.1. On a concrete runway.

12.1.2. On soil alongside a runway.

12.1.3. On an asphalt runway with a soil base.

12.1.4. On an asphalt runway with a concrete base.

3.2. <u>PREPARE THE TRAILER FOR LOWERING</u>.

Step 1: Set the parking hand brake by pulling the handle down.

Step 2: Never attempt to raise/lower the trailer on a steep incline.

Step 3: Lower the trailer on a flat, smooth surface.

Step 4: Clear the area under the trailer of any foreign material or sharp objects before lowering.

Step 5: Check that storage box lid is properly secured or removed.

Step 6: Clear the area of all unnecessary personnel.

Step 7: Keep hands and feet away from axle frames and trailer bottom during operation.

Notice. This AFQTP is *NOT* intended to replace the applicable technical references nor is it intended to replace hands-on training. It is to be used in conjunction with these for training purposes only.

3.3. LOWER THE TRAILER.

Step 1: Prepare the unit for operation.

NOTE:
This step was completed in the previous checklist.

CAUTION:
FAILURE TO COMPLY WITH STEP 2 WILL RESULT IN AN OVER-SERVICED HYDRAULIC RESERVOIR AND FLUID OVERFLOW.

Step 2: Connect the 8 ft long transmission hoses from the hydraulic power unit (HPU) mounted on the right side of the trailer to the quick disconnect block located directly behind the HPU.

2.1. Always use the same HPU to lower and then raise the trailer in order to prevent transfer of hydraulic fluid between HPU reservoirs.

2.2. If it becomes necessary to replace this unit or use the left side HPU for this operation, check the fluid level and adjust as necessary.

Step 3: Start the HPU per TO 35 E8-2-10-1, Paragraph 4-4.3.

CAUTION:
AT NO TIME SHOULD AN AXLE FRAME BE LEFT WITH ONLY ONE PIN INSTALLED FOR AN EXTENDED PERIOD OF TIME. NEVER PLACE THE CONTROL VALVE IN "LOWER TRAILER" WITH ONE PIN INSTALLED. DAMAGE TO THE AXLE SUPPORT FRAME COULD RESULT.

Step 4: Remove the four axle frame retaining pins. Two pins are located on the front of each axle support frame.

NOTE:
If the pins are hard to remove, the trailer weight may be resting on them. It may be necessary to temporarily place the control valves in the "raise trailer" position to remove this weight.

Step 5: Store the retaining pins in the front storage box.

Step 6: Clear the area of unnecessary personnel.

SAFETY:
KEEP FEET AND HANDS AWAY FROM AXLE FRAMES AND TRAILER BOTTOM DURING OPERATION TO PREVENT INJURY TO PERSONNEL.

Step 7: Place the control valves in the "lower trailer" position. As the trailer lowers, maintain a level attitude.

Step 8: When the axle support frames have reached their fully raised position, return the control valves to their neutral position

Step 9: Shut down the HPU per TO 35-E8-2-10-1, Paragraph 4-4.3.3.

Notice. This AFQTP is *NOT* intended to replace the applicable technical references nor is it intended to replace hands-on training. It is to be used in conjunction with these for training purposes only.

POSITION TRAILERS

PERFORMANCE CHECKLIST

INSTRUCTIONS:

The trainee must satisfactorily perform all parts of the task without assistance. Evaluate the trainee's performance using this checklist.

DID THE TRAINEE….?	YES	NO
Positions Trailers		
1. Determine the direction that the aircraft will land		
2. Locate Point "B" from "A" and perpendicular to the runway centerline at a distance Distance (B to A) = $\frac{\text{cable length + 15 ft}}{2}$		
3. Properly locate a point on the runway centerline allowing 990 ft for run out to stop the aircraft At this point (Point "A"), the pendant will be located		
4. Properly locate Point "C" from "A" and perpendicular to the runway centerline The distance from "A" will be: Distance (C to A) = $\frac{\text{cable length + 15 ft}}{2}$		
5. Clear the tape sweep area and the MAAS installation area of any obstructions such as lights, stones, or any other sharp objects The minimum tape sweep area is defined by lines from "B" and "C" to a Point "D" located on the landing zone centerline 990 ft from Point "A" in the direction of run out		
6. Locate one unit on each side of the runway at Points B and C with the runway edge sheaves facing toward the runway centerline		
7. Properly set the trailer parking brake and disconnect the trailer from the prime mover		
8. Observe all safety precautions		
Prepare The Trailer For Lowing		
1. Set the parking hand brake by pulling the handle down		
2. Attempt to raise/lower the trailer on a steep incline		
3. Lower the trailer on a flat, smooth surface		
4. Clear the area under the trailer of any foreign material or sharp objects before lowering		
5. Check that storage box lid is properly secured or removed		
6. Clear the area of all unnecessary personnel		
7. Ensure everyone's hands and feet were kept away from axle frames and trailer bottom during operation		

Notice. This AFQTP is *NOT* intended to replace the applicable technical references nor is it intended to replace hands-on training. It is to be used in conjunction with these for training purposes only.

PERFORMANCE CHECKLIST (Continued.)

DID THE TRAINEE….?	YES	NO
Lower The Trailer		
1. Prepare the unit for operation		
2. Connect the 8 ft long transmission hoses from the HPU mounted on the right side of the trailer to the quick disconnect block located directly behind the HPU		
3. Start the HPU per TO 35E8-2-10-1, Paragraph 4-4.3		
4. Observe the CAUTION: At no time should an axle frame be left with only one pin installed for an extended period of time. Never place the control valve in “lower trailer” with one pin installed. Damage to the axle support frame could result		
5. Remove the four-axle frame retaining pins. Two pins are located on the front of each axle support frame		
6. Store the retaining pins in the front storage box		
7. Clear the area of unnecessary personnel		
8. Observe WARNING: Keep feet and hands away from axle frames and trailer bottom during operation to prevent injury to personnel		
9. Place the control valves in the “lower trailer” position 10. As the trailer lowers, maintain a level attitude.		
11. Observe the axle support frames have reached their fully raised position, return the control valves to their neutral position		
12. Shut down the HPU per TO 35E8-2-10-1, Paragraph 4-4.3.3		

FEEDBACK: Trainer should provide both positive and/or negative feedback to the trainee immediately after the task is performed. This will ensure the issue is still fresh in the mind of both the trainee and trainer.

Notice. This AFQTP is *NOT* intended to replace the applicable technical references nor is it intended to replace hands-on training. It is to be used in conjunction with these for training purposes only.

MOBILE AIRCRAFT ARRESTING SYSTEM (MAAS)

PERFORM UNIDIRECTIONAL INSTALLATION

MODULE 28 **AFQTP UNIT 2**

INSTALL ANCHOR PLATES (28.2.2.3.1.)
INSTALL TURNBUCKLES (28.2.2.3.2.)

Notice. This AFQTP is *NOT* intended to replace the applicable technical references nor is it intended to replace hands-on training. It is to be used in conjunction with these for training purposes only.

INSTALL ANCHOR PLATES/TURNBUCKLES

Task Training Guide

STS Reference Number/Title:	28.2.2.3.1., Install Anchor Plates (Concrete). 28.2.2.3.2., Install Turnbuckles (Concrete)
Training References:	1. 35E8 series Technical Orders (TOs): 1.1. TO 35E8-2-1-101, USAF Aircraft Arresting Systems. 1.2. TO 35E8-2-10 Series/Work-cards, MAAS Operation and Service. 2. TO 38G2-89 Series, Wisconsin Engines. 3. Career Development Course (CDC) 3E052B Volume 3, Unit 6: *Mobile Aircraft Arresting System.* 4. AFI 32-1043, *Management of Aircraft Arresting Systems*. 5. CD-ROM Air Force Qualification Training Package (AFQTP) 3E0X2 Electrical Power Production, Version 1.0, Nov 97: *Mobile Aircraft Arresting System (MAAS).* 6. Local Procedures.
Prerequisites:	1. **Possess as a minimum a 3E032 AFSC.** 2. **Review the following references:** 2.1. Review CDC 3E052B Volume 3, Unit 6. 2.2. 35E8 series TOs. 2.3. 38G2-89 series TOs. 3. **Complete CD-ROM AFQTP Electrical Power Production, Version 1.0, Nov 97: *Mobile Aircraft Arresting System (MAAS).***
Equipment/Tools Required:	1. Computer to support AFQTP CD-ROMs. 2. Applicable technical references. 3. MAAS. 4. Personal safety equipment. 5. General tool kit.
Learning Objective:	Install anchor plates and turnbuckles for concrete installation of MAAS.
Samples of Behavior:	Trainee will be able to install anchor plates and turnbuckles.
Notes:	
1. To successfully complete this element follow the steps outlined in the applicable technical manual exactly--no exceptions. 2. Any safety violation is an automatic failure.	

Notice. This AFQTP is *NOT* intended to replace the applicable technical references nor is it intended to replace hands-on training. It is to be used in conjunction with these for training purposes only.

INSTALL ANCHOR PLATES/TURNBUCKLES

1. Background. Installing two anchor plates to the runway and attaching the MAAS to these plates with turnbuckles accomplish installation of a MAAS on a concrete runway for unidirectional arrestment capability. All tools and anchoring hardware necessary for the installation are stored on each MAAS unit. This installation is also used on a concrete surface with an asphalt overlay of 1 in. or less in thickness.

1.1. For an on-runway installation determine which cable is used, and position the trailers so that their span = cable length + 15 ft. Span is the distance measured between units from runway edge sheave to runway edge sheave.

2. Complete the CD-ROM AFQTP 3E0X2 Electrical Power Production, Version 1.0, Nov 97: Mobile Aircraft Arresting System (MAAS) for detailed instruction on concrete installation. ***After completing the CD-ROM AFQTP see your Unit Education and Training Manager to take the mandatory CerTest # 8012, MAAS QTP, Lesson 3. Trainee must score at least 80% to meet the minimum completion requirements for diamond tasks.***

NOTE:
The review questions for this material are in the above-mentioned CD-ROM.

3. If the equipment is available, then perform the following steps:

3.1. REMOVING THE WHEEL.

SAFETY:
TIRE/WHEEL ASSEMBLY WEIGHT IS APPROXIMATELY 410 LB. (ANYTHING WEIGHING OVER 75 POUNDS REQUIRES TWO PEOPLE TO LIFT.) INSURE THAT THERE IS ADEQUATE LIFTING CAPABILITY AND PERSONNEL TO HANDLE THIS WEIGHT.

NOTE:
Wheels on right side have right hand thread lug nuts, and wheels on the left side have left hand thread lug nuts.

Step 1: Lower rear wheels to the ground by positioning rear raise/lower valve to the lower position. Loosen all six-wheel lug nuts using 1-½ in. socket and breaker bar.

Step 2: Reposition axle such that the tire is just clear of the floor or ground.

2.1. Remove all lug nuts.

2.2. Slide tire/wheel assembly forward and free of hub bolts.

Step 3: Once the trailers are in position and lowered, remove the required installation tools and hardware stored on each unit.

Notice. This AFQTP is *NOT* intended to replace the applicable technical references nor is it intended to replace hands-on training. It is to be used in conjunction with these for training purposes only.

Step 4: The installation procedure will differ for the trailer located on the right side of the runway. This is due to the anchor plate located in the area under the right rear tire. When anchoring this trailer, remove the right rear tire first, and then store the lug nuts on the wheel studs and the tire on the far side of the trailer.

3.2. PREPARING FOR THE INSTALLATION OF THE ANCHOR PLATES.

Step 5: Install the drill bit in the hydraulic hammer drill. (The hydraulic hammer drill is powered by the HPU and operates in the breaker mode. Fifty foot transmission hoses provide the connection from the HPU to the drill via quick disconnects.)

Step 6: Connect the hydraulic hammer drill to the 50 ft hoses attached to the hydraulic power unit. Be sure to clean the quick disconnecting fittings before connecting.

Step 7: Install the two turnbuckles as describe below.

7.1. Adjust the length of the two turnbuckles used to approximately 39 in. measured from the centers of the clevis pins.

NOTE:
A triple turnbuckle fitting may be installed on the anchor bracket located in the vicinity of the right rear tire of the right side unit. This will prevent interference with the wheel brake hub during drilling procedures.

7.2. Attach the locknut end of each turnbuckle to the MAAS at the appropriate anchor points.

7.3. Attach the other end of each turnbuckle to an anchor plate and align anchor plate.

2.3. INSTALL ANCHOR PLATES.

Step 8: Start the HPU per TO 35E8-2-10-1, Paragraph 4-4.3.

Step 9: Using the anchor plate as a template, drill the 1 in. diameter holes in the concrete to a depth of 6-½ in.

9.1. To maintain plate position, insert a taper bolt, nut, and washer into each hole to a depth of approximately ½ the bolt length.

9.2. Adjust the taper nut such that inserting requires tapping with the 4 lb. hammer.

9.3. Six holes are required per anchor plate.

9.4. If asphalt overlay of 1 in. or less is present, drill through the asphalt and into the concrete to a depth of 6 in.

Notice. This AFQTP is *NOT* intended to replace the applicable technical references nor is it intended to replace hands-on training. It is to be used in conjunction with these for training purposes only.

CAUTION:

ALL SIX-ANCHOR BOLTS ARE REQUIRED AND MUST BE INSTALLED TO PROVIDE FOR THE PROPER SAFETY MARGIN. SHOULD PROBLEMS OCCUR DURING AN EMERGENCY INSTALLATION OF THE MAAS (I.E. DRILL ENCOUNTERS UNEXPECTED RE-BAR), A MINIMUM OF FOUR BOLTS PROPERLY INSTALLED WILL MEET THE ARRESTMENT LOADS. WHEN TIME PERMITS, THE SYSTEM SHOULD BE UPGRADED TO FULL CAPACITY WITH SIX BOLTS PER ANCHOR PLATE.

Step 10: Shut down the HPU per TO 35-E8-2-10-1, Paragraph 4-4.3.3.

Step 11: Seat all taper bolts and nuts using the taper bolt gauge to set the clearance (3/8 in.) between the bolt head and the anchor plate.

Step 12: Tighten down all bolts.

Step 13: Tighten the turnbuckles to remove any slack, but do not over tighten causing the trailer to move.

Step 14: Tighten locknut on turnbuckles.

NOTE:

For rapid installation of the MAAS, Steps 11 through 14 are performed simultaneously with Steps 1 through 10. The barrier crew team performs these steps.

Notice. This AFQTP is *NOT* intended to replace the applicable technical references nor is it intended to replace hands-on training. It is to be used in conjunction with these for training purposes only.

INSTALL ANCHOR PLATES/TURNBUCKLES

PERFORMANCE CHECKLIST

INSTRUCTIONS:

The trainee must satisfactorily perform all parts of the task without assistance. Evaluate the trainee's performance using this checklist.

DID THE TRAINEE….?	YES	NO
Removing The Wheel.		
1. Lower rear wheels to the ground by positioning rear raise/lower valve to the lower position and loosen all six-wheel lug nuts using 1-½ in. socket and breaker bar before lowering the trailer		
2. Reposition axle such that the tire is just clear of the floor or ground and remove the tire		
3. Remove the correct tire		
Preparing For The Installation Of The Anchor Plates.		
1. Install the drill bit in the hydraulic hammer drill		
2. Connect the hydraulic hammer drill to the 50 ft hoses attached to the hydraulic power unit		
3. Ensure to cleanliness the quick disconnecting fittings before connecting		
Installation Of The Turnbuckles.		
1. Install the two turnbuckles before drilling the bolts patterns		
2. Adjust the length of the two turnbuckles used to approximately 39 in. measured from the centers of the clevis pins		
3. Use the triple turnbuckle fitting and installed it on the anchor bracket located in the vicinity of the right rear tire of the right side unit		
4. Attach the locknut end of each turnbuckle to the MAAS at the appropriate anchor points		
5. Attach the other end of each turnbuckle to an anchor plate and align anchor plate		
Install Anchor Plates.		
1. Start the HPU per TO 35E8-2-10-1, Paragraph 4-4.3		
2. Used the anchor plate as a template and drill the 1 inch diameter holes in the concrete to a depth of 6-½ inch		
3. Maintain plate position by inserting a taper bolt, nut, and washer into each hole to a depth of approximately ½ the bolt length		
4. Adjust the taper nut by inserting and tapping with the 4 lb. hammer		
5. Drill six holes are required per anchor plate		
6. Understand that should problems occur during an emergency installation of the MAAS (i.e. drill encounters unexpected re-bar), a minimum of four bolts properly installed will meet the arrestment loads (When time permits, the system should be upgraded to full capacity with six bolts per anchor plate.)		

Notice. This AFQTP is *NOT* intended to replace the applicable technical references nor is it intended to replace hands-on training. It is to be used in conjunction with these for training purposes only.

PERFORMANCE CHECKLIST (Continued)

DID THE TRAINEE….?	YES	NO
7. Drill through the asphalt and into the concrete to a depth of 6 inch (If asphalt overlay of 1 inch or less is present.)		
8. Shut down the HPU per TO 35E8-2-10-1, Paragraph 4-4.3.3		
9. Seat all taper bolts and nuts using the taper bolt gauge to set the clearance (3/8 inch) between the bolt head and the anchor plate		
10. Tighten down all bolts		
11. Tighten the turnbuckles to remove any slack, but do not over tighten causing the trailer to move		
12. Tighten locknut on turnbuckles		

FEEDBACK: Trainer should provide both positive and/or negative feedback to the trainee immediately after the task is performed. This will ensure the issue is still fresh in the mind of both the trainee and trainer.

Notice. This AFQTP is *NOT* intended to replace the applicable technical references nor is it intended to replace hands-on training. It is to be used in conjunction with these for training purposes only.

MOBILE AIRCRAFT ARRESTING SYSTEM (MAAS)

PERFORM UNIDIRECTIONAL INSTALLATION

MODULE 28 **AFQTP UNIT 2**

TRAILER STAKES (28.2.2.4.1.1.)
TURNBUCKLES (28.2.2.4.1.2.)
KM STAKELINES (28.2.2.4.1.3.)
ATTACH KM STAKELINE TO TURNBUCKLE (28.2.2.4.2.)

Notice. This AFQTP is *NOT* intended to replace the applicable technical references nor is it intended to replace hands-on training. It is to be used in conjunction with these for training purposes only.

TRAILER STAKES/TURNBUCKLES/KM STAKELINES/ATTACH KM STAKELINE TO TURNBUCKLE

Task Training Guide

STS Reference Number/Title:	28.2.2.4.1.1., Trailer stakes (Soil install.). 28.2.2.4.1.2., Turnbuckles (Soil install.) 28.2.2.4.1.3., KM stakelines (Soil install.) 28.2.2.4.2., Attach KM stakeline to turnbuckle (Soil install.)
Training References:	1. 35E8 series Technical Orders (TOs): 1.1. TO 35E8-2-1-101, USAF Aircraft Arresting Systems. 1.2. TO 35E8-2-10 Series/Work-cards, MAAS Operation and Service. 2. TO 38G2-89 Series, Wisconsin Engines. 3. Career Development Course (CDC) 3E052B Volume 3, Unit 6: *Mobile Aircraft Arresting System.* 4. AFI 32-1043, *Management of Aircraft Arresting Systems*. 5. CD-ROM Air Force Qualification Training Package (AFQTP) 3E0X2 Electrical Power Production, Version 1.0, Nov 97: *Mobile Aircraft Arresting System (MAAS).* 6. Local Procedures.
Prerequisites:	1. **Possess as a minimum a 3E032 AFSC.** 2. **Review the following references:** 2.1. Review CDC 3E052B Volume 3, Unit 6. 2.2. 35E8 series TOs. 2.3. 38G2-89 series TOs. 3. **Complete CD-ROM AFQTP Electrical Power Production, Version 1.0, Nov 97: *Mobile Aircraft Arresting System (MAAS).***
Equipment/Tools Required:	1. Computer to support AFQTP CD-ROMs. 2. Applicable technical references. 3. MAAS. 4. Personal safety equipment. 5. General tool kit.
Learning Objective:	Install trailer stakes, turnbuckles, KM stakelines and attach KM stakeline to turnbuckle soil installation of MAAS.
Samples of Behavior:	Trainee will be able to perform soil installation of MAAS.
Notes:	
1. To successfully complete this element follow the steps outlined in the applicable technical manual exactly--no exceptions. 2. Any safety violation is an automatic failure.	

Notice. This AFQTP is *NOT* intended to replace the applicable technical references nor is it intended to replace hands-on training. It is to be used in conjunction with these for training purposes only.

TRAILER STAKES/TURNBUCKLES/KM STAKELINES/ATTACH KM STAKELINE TO TURNBUCKLE

1. Background. The MAAS can be anchored directly to the soil alongside a runway or secondary landing site. All tools and anchoring hardware are stored on each unit. This system incorporates 19 aluminum stakes that are 5-1/2 ft long. Ten of these stakes are installed through stake pockets located around the perimeter of the trailer. The remaining nine stakes are installed in the KM anchoring configuration. Stake installation is accomplished with a hydraulic breaker (jackhammer), which is powered by a hydraulic power unit (HPU). Sets of 50 ft long hydraulic hoses provide attachment of the breaker to the HPU. Stake installation can be done without removing the HPU from its storage bracket.

2. Complete the CD-ROM AFQTP 3E0X2 Electrical Power Production, Version 1.0, Nov 97: Mobile Aircraft Arresting System (MAAS) for detailed instruction on concrete installation. ***After completing the CD-ROM AFQTP see your Unit Education and Training Manager to take the mandatory CerTest # 8013, MAAS QTP, Lesson 4. Trainee must score at least 80% to meet the minimum completion requirements for diamond tasks.***

> **NOTE:**
> The review questions for this material are in the above-mentioned CD-ROM.

3. If the equipment is available, then perform the following steps:

> **NOTE:**
> For rapid installation, a four-man team is required for each trailer installation. Two men from each team are assigned to each HPU and breaker to install the anchoring hardware located on the same side as the HPU assigned.

3.1. PREPARING FOR SOIL INSTALLATION.

Step 1: Once the trailers are in position and lowered, remove the required installation tools and hardware stored on each unit.

Step 2: Remove the work stands stored on each unit. Removable work stand leg is stored in the soil, asphalt/soil equipment module.

Step 3: Install the 1-¼ hex driver shank and the 3-½ stake driver on each hydraulic breaker unit.

Step 4: Connect the hydraulic breakers to the 50 ft long hose assemblies attached to the hydraulic power units. Be sure to clean the quick disconnecting fittings before connecting.

Notice. This AFQTP is *NOT* intended to replace the applicable technical references nor is it intended to replace hands-on training. It is to be used in conjunction with these for training purposes only.

3.2. INSTALLING THE TURNBUCKLES

Step 5: Adjust the length of the three turnbuckles used to approximately 36 inch measured from the centers of the clevis pins.

Step 6: Attach the triple turnbuckle fitting to the appropriate trailer body anchor point with the 1-¼ clevis pin and hitch pin clip.

Step 7: Attach the three turnbuckles.

3.3. INSTALLING THE KM STAKE-LINES.

Step 8: Start the HPU per TO 35E8-2-10-1, Paragraph 4-4.3.

SAFETY:

DUE TO CERTAIN SOIL CONDITIONS OR TERRAIN, IT MAY BE NECESSARY TO PROVIDE A PERSON TO HELP STABILIZE THE WORK STAND WHEN IN USE TO AVOID INJURY TO PERSONNEL.

NOTE:

Proper orientation of the stakes will facilitate their removal. Stakes should be installed at a 15º angle.

3.4. INSTALLING THE TRAILER STAKES.

Step 9: Install the stakes through the 10 stake pockets located on the perimeter of the trailer.

9.1. The stakes are painted green on the top 18 in. to indicate the recommended depth to drive each stake.

9.2. Drive the stake until painted portion reaches ground level.

9.3. The minimum acceptable depth a stake can be driven is 36 inch.

9.4. If asphalt overlay of 1 in. or less is present, drill through the asphalt and into the concrete to a depth of 6 in.

NOTE:

During a rapid emergency installation, install two stakes per side in the stake pockets, and then proceed to Step 10. As time permits, drive the remainder of the body stakes. Drive each stake to the depth recommended. If any stake strikes an object, such as a rock and cannot be driven to the minimum depth in approximately 2 minutes, move on to the next stake pocket location or relocate the stake line to allow for proper stake installation. When time permits, drive all stakes to the recommended depth.

Notice. This AFQTP is *NOT* intended to replace the applicable technical references nor is it intended to replace hands-on training. It is to be used in conjunction with these for training purposes only.

Step 10: After installation of the body stakes raise the rear axle support frame.

Step 11: Install the remaining nine stakes in the KM anchoring configuration.

Step 12: Tighten the locknut on the turnbuckle.

Step 13: Repeat Steps 9 through 12 for remaining KM outriggers.

Step 14: Shut down the HPU per TO 35-E8-2-10-1, Paragraph 4-4.3.3.

Notice. This AFQTP is *NOT* intended to replace the applicable technical references nor is it intended to replace hands-on training. It is to be used in conjunction with these for training purposes only.

TRAILER STAKES/TURNBUCKLES/KM STAKELINES/ATTACH KM STAKELINE TO TURNBUCKLE

PERFORMANCE CHECKLIST

INSTRUCTIONS:

The trainee must satisfactorily perform all parts of the task without assistance. Evaluate the trainee's performance using this checklist.

DID THE TRAINEE….?	YES	NO
Preparing For Soil Installation		
1. Remove the required installation tools, hardware, and store them on each unit		
2. Remove the work stands and stored them on each unit		
3. Install the 1-¼ hex driver shank and the 3-½ stake driver on each hydraulic breaker unit		
4. Connect the hydraulic breakers to the 50 ft long hose assemblies attached to the hydraulic power units		
5. Clean the quick disconnecting fittings before connecting		
Installing The Turnbuckles		
1. Adjust the length of the three turnbuckles used to approximately 36 inch measured from the centers of the clevis pins		
2. Attach the triple turnbuckle fitting to the appropriate trailer body anchor point with the 1-¼ clevis pin and hitch pin clip		
Installing The KM Stake-Lines		
1. Start the HPU and lower the rear wheels to the ground to allow installation of the stakes in this area		
2. Properly orientation of the stakes will facilitate their removal		
3. Install the stakes at a 15º angle		
Installing The Trailer Stakes		
1. Install the stakes through the 10 stake pockets located on the perimeter of the trailer		
2. After installation of the body stakes raise the rear axle support frame		
3. Install the remaining nine stakes in the KM anchoring configuration		
4. Tighten the locknut on the turnbuckle		
5. Repeat Steps 9 through 12 for remaining KM outriggers		
6. Shut down the HPU per TO 35E8-2-10-1, Paragraph 4-4.3.3		

FEEDBACK: Trainer should provide both positive and/or negative feedback to the trainee immediately after the task is performed. This will ensure the issue is still fresh in the mind of both the trainee and trainer.

Notice. This AFQTP is *NOT* intended to replace the applicable technical references nor is it intended to replace hands-on training. It is to be used in conjunction with these for training purposes only.

MOBILE AIRCRAFT ARRESTING SYSTEM (MAAS)

LIGHTWEIGHT FAIRLEAD BEAM INSTALLATION (LWFB)

MODULE 28 **AFQTP UNIT 2**

POSITION (28.2.4.1.2.)
INSTALL OUT BOARD ANCHORING SYSTEM (28.2.4.1.4.)
PERFORM FINAL ALIGNMENT (28.2.4.1.5.)

Notice. This AFQTP is *NOT* intended to replace the applicable technical references nor is it intended to replace hands-on training. It is to be used in conjunction with these for training purposes only.

POSITION / INSTALL OUTBOARD ANCHORING SYSTEM / PERFORM ALIGNMENT

Task Training Guide

STS Reference Number/Title:	28.2.4.1.2., Position. 28.2.4.1.4., Install out board anchoring system. 28.2.4.1.5., Perform final alignment .
Training References:	1. 35E8-2-10-1, *Mobile Aircraft Arresting System.* 2. 35E8-2-11-2, *Lightweight Fairlead Beam Configuration Set.* 3. Career Development Course (CDC) 3E052B Volume 3, Unit 6: *Mobile Aircraft Arresting System.* 4. CD-ROM Air Force Qualification Training Package (AFQTP) 3E0X2 Electrical Power Production, Version 1.0, Oct 99: *Lightweight Fairlead Beam.* 5. CD-ROM AFQTP 3E0X2 Electrical Power Production, Version 1.0, Nov 97: *Mobile Aircraft Arresting System (MAAS).* 6. Local Procedures.
Prerequisites:	1. **Possess as a minimum a 3E032 AFSC.** 2. **Review the following references:** 2.1. Review CDC 3E052B Volume 3, Unit 6. 2.2. 35E8-2-10-1 and 35E8-2-11-2. 2.3. CD-ROM AFQTP Electrical Power Production, Version 1.0, Nov 97: *Mobile Aircraft Arresting System (MAAS).* 3. **Complete the CD-ROM AFQTP 3E0X2 Electrical Power Production, Version 1.0, Oct 99: *Lightweight Fairlead Beam.***
Equipment/Tools Required:	1. Computer to support AFQTP CD-ROMs. 2. Applicable technical references. 3. MAAS. 4. Personal safety equipment. 5. General tool kit.
Learning Objective:	Positioning and installing the LWFB.
Samples of Behavior:	Trainee will be able to position and install LWFB.
Notes:	
1. To successfully complete this element follow the steps outlined in the applicable technical manual exactly--no exceptions. 2. Any safety violation is an automatic failure.	

Notice. This AFQTP is *NOT* intended to replace the applicable technical references nor is it intended to replace hands-on training. It is to be used in conjunction with these for training purposes only.

POSITION / INSTALL OUTBOARD ANCHORING SYSTEM / PERFORM ALIGNMENT

1. Background. The lightweight fairlead beam (LWFB) is designed to enhance the capabilities of the Mobile Aircraft Arresting Systems (MAAS). The LWFB configuration set presents a significantly decreased arresting gear profile at the edge of the runway, thus reducing potential hazards to incoming and outgoing aircraft. Like the MAAS, the configuration set can be warehouse stored and deployed as needed. The system can easily be located at a runway site.

1.1. The LWFB configuration set consists of two identical LWFB assemblies and installation equipment to anchor the beams at the installation. One beam is installed on each side of the runway and is anchored to the soil using the KM earth anchoring system.

1.2. Positioning of, and anchoring instructions for the MAAS are also provided in TO 35E8-2-11-2. The anchoring equipment supplied with the installation equipment and tools supplied as part of the MAAS, provide all parts necessary to install and operate the hook cable arresting gear system.

2. Complete the CD-ROM AFQTP 3E0X2 Electrical Power Production, Version 1.0, Oct 99: Lightweight Fairlead Beam for detailed instruction on the installation of the LWFB. ***After completing the CD-ROM AFQTP see your Unit Education and Training Manager to take the mandatory CerTest # 8107, Lightweight Fairlead Beam 1-2. Trainee must score at least 80% to meet the minimum completion requirements for diamond tasks.***

> **NOTE:**
> The review questions for this material are in the above-mentioned CD-ROM.

3. If the equipment is available, then perform the following steps:

3.1. POSITION OPERATIONS.

Step 1: Calculate distance from point A to runway edge sheave on LWFB. This distance (in feet) is: $\frac{\text{Hook Cable length} + 15}{2}$

Step 2: Tie a lacing cord or string of sufficient length between the two MAAS trailers, aligned with the center of the tape exit point on each MAAS trailer.

Step 3: Ensure the string or lacing cord is taut and straight (even light wind will cause a significant bow in the string between the two trailers) and mark a new point A where the cord crosses the runway centerline.

> **NOTE:**
> One person must maintain alignment of the string or cord with the new point A while steps 4 and 5 are performed.

Notice. This AFQTP is *NOT* intended to replace the applicable technical references nor is it intended to replace hands-on training. It is to be used in conjunction with these for training purposes only.

Step 4: Measure the proper distance (the distance calculated in above) from point A and mark point C1.

Step 5: Measure the proper distance (the distance calculated above) from point A and mark point C2.

NOTE:
Use of a suitable sling routed through the hand-holes in the LWFB will allow you to position the fairlead beam with less effort. Care must be taken to keep personnel from beneath the beam when it's moved and to pad the sling where it contacts the edges of the hand-holes to keep it from being cut.

Step 6: Locate one LWFB on each side of the runway at points C1 and C2. Place LWFB so the center of the beams and their sheaves are aligned with the lacing cord or string.

Step 7: Ensure the tape path that intersect with the runway crown is within the limits and exit the sheave of the LWFB is equal to or slightly higher than the runway surface. Use a straightedge or string to make this determination if necessary.

Step 8: Pull a sufficient length of tape from each MAAS trailer and reeve the tape through the LWFB.

Step 9: Check the position of the LWFB to ensure that no part of the stake lines will interfere with the tape sweep area.

3.2. <u>INSTALLING ANCHORING SYSTEM</u>.

NOTE:
Do not install the body stakes in the LWFB stake pockets until a tape pullout has been performed approximately 300 feet in each direction and you have verified the tape will track properly.

Step 10: Install a triple turnbuckle fitting onto each of the two anchor fittings of the LWFB front sheave housing. Install a triple turnbuckle fitting onto each of the two anchor points of the LWFB rear sheave housing.

NOTE:
Proper orientation of the stakes will facilitate their removal.

Notice. This AFQTP is *NOT* intended to replace the applicable technical references nor is it intended to replace hands-on training. It is to be used in conjunction with these for training purposes only.

Step 11: Install KM Anchoring System onto the front sheave housing of LWFB. Refer to Figures 9 and 10 in TO 35E8-2-11-2. Each K-M stake line consists of one turnbuckle, one master link, one stake guide, four stakes, three spacers, and three tie stake spacers. Intermediate stake lines are connected to the beam anchor fittings using turnbuckles, a chain sling, and a triple turnbuckle fitting. Refer to paragraph 9.3 steps e through r for installation of stakes at front sheave housing of lightweight fairlead beam, on one KM stake line.

NOTE:
The stake lines attached to the rear sheave housing of the LWFB require only two stakes per stake line.

Step 12: Adjust turnbuckle length to approximately 36 inches. Attach locknut end of each two turnbuckles to outer holes of each triple turnbuckle fitting.

Step 13: Install master link around stake guide. Be sure that master link under retaining plate of stake guide.

Step 14: Attach free end of master link to turnbuckle.

Step 15: Pull stake guide and turnbuckle tight to locate first stake. Install a stake through stake guide, driving until painted portion reaches ground level.

Step 16: Install a spacer over stake and rest it on stake guide.

Step 17: Install a tie stake spacer over stake and rest it on first spacer. The centerline of the stake spacer must be in line with the turnbuckle.

Step 18: Install second stake through free end of tie stake spacer, driving until painted portion reaches ground level.

Step 19: Repeat steps 12 through 18 for the remaining rear sheave housing KM stake lines.

Step 20: Tighten turnbuckles to remove any slack in outrigger, but do not over tighten causing the beam to move.

3.3. <u>FINAL POSITIONING OF THE LWFB</u>.

Step 21: Release the reel brakes on each energy absorber and using a truck or similar tow vehicle, perform a tape pull-out approximately 300 feet in both directions.

Step 22: Observe while the tape passes through the center of the rear entry slot of the LWFB during the pull-out and rewind operation. Adjust the rear sheave housing turnbuckles to center the tape in the slot and on the sheaves. Repeat this procedure until proper alignment is achieved.

Notice. This AFQTP is *NOT* intended to replace the applicable technical references nor is it intended to replace hands-on training. It is to be used in conjunction with these for training purposes only.

Step 23: Tighten the locknuts on the turnbuckles.

Step 24: Install 12 stakes through LWFB body stake pockets.

Step 25: Perform proof loading and functional checkout in accordance with (IAW) the instructions in TO 35E8-2-10-1.

25.1. EXCEPTION: When proof loading, exposed 650 feet of tape (instead of 450 feet) and stretch it 39 feet (instead of 23 feet) three times.

Step 26: Perform tape stack height measurement IAW TO 35E8-2-11.

Notice. This AFQTP is *NOT* intended to replace the applicable technical references nor is it intended to replace hands-on training. It is to be used in conjunction with these for training purposes only.

POSITION / INSTALL OUTBOARD ANCHORING SYSTEM / PERFORM ALIGNMENT

PERFORMANCE CHECKLIST

INSTRUCTIONS:

The trainee must satisfactorily perform all parts of the task without assistance. Evaluate the trainee's performance using this checklist.

DID THE TRAINEE….?	YES	NO
POSITION OPERATIONS.		
1. Calculate the distance from point A to runway edge sheave on LWFB correctly		
2. Align the two MAAS correctly		
3. Mark a new point A where the cord crosses the runway centerline		
4. Measure the proper distance from point A and mark point C1		
5. Measure the proper distance from point A and mark point C2		
6. Locate one LWFB on each side of the runway at points C1 and C2		
7. Place LWFB so the center of the beams and their sheaves are aligned with the lacing cord or string		
8. Ensure the sheave of the LWFB is equal to or slightly higher than the runway surface		
9. Pull a sufficient length of tape from each MAAS trailer, and reeve the tape through the LWFB		
10. Check the position of the LWFB to ensure that no part of the stake lines will interfere with the tape sweep area		
Installing Anchoring System.		
1. Install a triple turnbuckle fitting onto each of the two anchor fittings of the LWFB front sheave housing		
2. Install a triple turnbuckle fitting onto each of the two anchor points of the LWFB rear sheave housing		
3. Proper orientate the stakes to facilitate their removal		
4. Install KM Anchoring System onto the front sheave housing of LWFB		
5. Adjust turnbuckle length to approximately 36 inches		
6. Attach locknut end of each two turnbuckles to outer holes of each triple turnbuckle fitting		
7. Install master link around stake guide correctly		
8. Attach free end of master link to turnbuckle		
9. Pull stake guide and turnbuckle tight to locate first stake		
10. Install a stake through stake guide, driving until painted portion reaches ground level		
11. Install a spacer over stake and rest it on stake guide		
12. Install a tie stake spacer over stake and rest it on first spacer		
13. Install second stake through free end of tie stake spacer, driving until painted portion reaches ground level		

Notice. This AFQTP is *NOT* intended to replace the applicable technical references nor is it intended to replace hands-on training. It is to be used in conjunction with these for training purposes only.

PERFORMANCE CHECKLIST (Continued)

DID THE TRAINEE….?	YES	NO
Final Positioning Of The LWFB.		
1. Tighten turnbuckles to remove any slack in outrigger, without moving the beam		
2. Release the reel brakes on each energy absorber and use a truck or similar tow vehicle to perform a tape pull-out approximately 300 feet in both directions		
3. Proper alignment the LWFB		
4. Tighten the locknuts on the turnbuckles		
5. Install 12 stakes through LWFB body stake pockets		
6. Perform proofloading and functional checkout IAW the instructions in TO 35E8-2-10-1		
7. Perform tape stack height measurement IAW the instruction in TO 35E8-2-11		
8. Comply with all safety requirements		

FEEDBACK: Trainer should provide both positive and/or negative feedback to the trainee immediately after the task is performed. This will ensure the issue is still fresh in the mind of both the trainee and trainer.

Notice. This AFQTP is *NOT* intended to replace the applicable technical references nor is it intended to replace hands-on training. It is to be used in conjunction with these for training purposes only.

MOBILE AIRCRAFT ARRESTING SYSTEM (MAAS)

PERFORM UNIDIRECTIONAL INSTALLATION

MODULE 28 **AFQTP UNIT 2**

ATTACH HOOK CABLE (28.2.5.)

Notice. This AFQTP is *NOT* intended to replace the applicable technical references nor is it intended to replace hands-on training. It is to be used in conjunction with these for training purposes only.

ATTACH HOOK CABLE

Task Training Guide

STS Reference Number/Title:	28.2.5., Attach hook cable
Training References:	1. 35E8 series Technical Orders (TOs): 1.1. TO 35E8-2-1-101, USAF Aircraft Arresting Systems. 1.2. TO 35E8-2-10 Series/Work-cards, MAAS Operation and Service. 2. TO 38G2-89 Series, Wisconsin Engines. 3. Career Development Course (CDC) 3E052B Volume 3, Unit 6: *Mobile Aircraft Arresting System.* 4. AFI 32-1043, *Management of Aircraft Arresting Systems*. 5. CD-ROM Air Force Qualification Training Package (AFQTP) 3E0X2 Electrical Power Production, Version 1.0, Nov 97: *Mobile Aircraft Arresting System (MAAS).* 6. Local Procedures.
Prerequisites:	1. **Possess as a minimum a 3E032 AFSC.** 2. **Review the following references:** 2.1. Review CDC 3E052B Volume 3, Unit 6. 2.2. 35E8 series TOs. 2.3. 38G2-89 series TOs. 3. **Complete** CD-ROM AFQTP Electrical Power Production, Version 1.0, Nov 97: *Mobile Aircraft Arresting System (MAAS).*
Required:	1. Computer to support AFQTP CD-ROMs. 2. Applicable technical references. 3. MAAS. 4. Personal safety equipment. 5. General tool kit.
Learning Objective:	Attach hook cable.
Samples of Behavior:	Trainee will be able to attach hook cable.
Notes:	
1. To successfully complete this element follow the steps outlined in the applicable technical manual exactly--no exceptions. 2. Any safety violation is an automatic failure.	

Notice. This AFQTP is *NOT* intended to replace the applicable technical references nor is it intended to replace hands-on training. It is to be used in conjunction with these for training purposes only.

ATTACH HOOK CABLE

1. Background. With the arresting barrier in battery position, the aircraft engages the hook cable and causes the nylon tapes to pay out. The-braking system is activated by the rotation of the tape storage drums and the aircraft is brought safely to a stop.

2. Complete the CD-ROM AFQTP 3E0X2 Electrical Power Production, Version 1.0, Nov 97: Mobile Aircraft Arresting System (MAAS) for detailed instruction on the hook cable. ***After completing the CD-ROM AFQTP see your Unit Education and Training Manager to take the mandatory CerTest # 8012, MAAS QTP, Lesson 3. Trainee must score at least 80% to meet the minimum completion requirements for diamond tasks.***

> **NOTE:**
> The review questions for this material are in the above-mentioned CD-ROM.

3. If the equipment is available, then perform the following steps:

3.1. ATTACH HOOK CABLE.

> **SAFETY:**
> **1. DO NOT ATTEMPT TO REMOVE HOOK CABLE WHILE THE SYSTEM IS PRETENSION. INJURY TO PERSONNEL OR EQUIPMENT MAY RESULT.**
> **2. PERSONNEL SHOULD WEAR WORK GLOVES WHEN HANDLING CABLE.**

Step 1: Pull cable off cable reel.

1.1. Ensure you have the right cable.

Step 2: Place protective cover over tape connector.

2.1. This could be a tire or protective cover that comes with the MAAS.

Step 3: Insert cable into tongue of tape connector.

Step 4: Insert tape connector pin into tape connector attaching the cable to the tape connector.

4.1. A special manufactured tool called a Bullet is designed to aid in the installation of the tape connector pin. Refer to the technical manual for specifications.

4.2. If you are using a hammer, be careful not to damage the threads. Highly recommended to use a rubber mallet for inserting pins. This could cause you problems when you need to remove the cable.

4.3. Install the connector pin until the flat potion of the pin is flush with the tape connector. There is a locking ridge for the pin.

Step 5: Screw the anchor nut onto the tape connector pin.

Step 6: Insert the anchor nut setscrew that locks the anchor nut.

6.1. Have the setscrew to a depth that is no longer that allows the anchor nut to turn.

Step 7: Drag or pull the other of the cable to the other unit. Connect the cable to the tape connector in the same manner.

Notice. This AFQTP is *NOT* intended to replace the applicable technical references nor is it intended to replace hands-on training. It is to be used in conjunction with these for training purposes only.

ATTACH HOOK CABLE

PERFORMANCE CHECKLIST

INSTRUCTIONS:

The trainee must satisfactorily perform all parts of the task without assistance. Evaluate the trainee's performance using this checklist.

DID THE TRAINEE….?	YES	NO
1. Pull cable off cable reel		
2. Ensure the team has the right cable		
3. Place protective cover over tape connector		
4. Insert cable into tongue of tape connector		
5. Insert tape connector pin into tape connector attaching the cable to the tape connector		
6. Screw the anchor nut onto the tape connector pin		
7. Insert the anchor nut setscrew that locks the anchor nut		
8. Have the setscrew to a depth that is no longer that allows the anchor nut to turn		
9. Drag or pull the other of the cable to the other unit		
10. Connect the cable to the tape connector in the same manner		
11. Comply with all safety requirements		

FEEDBACK: Trainer should provide both positive and/or negative feedback to the trainee immediately after the task is performed. This will ensure the issue is still fresh in the mind of both the trainee and trainer.

Notice. This AFQTP is *NOT* intended to replace the applicable technical references nor is it intended to replace hands-on training. It is to be used in conjunction with these for training purposes only.

MOBILE AIRCRAFT ARRESTING SYSTEM (MAAS)

PERFORM UNIDIRECTIONAL INSTALLATION

MODULE 28 **AFQTP UNIT 2**

TENSION HOOK CABLE (28.2.6.)

Notice. This AFQTP is *NOT* intended to replace the applicable technical references nor is it intended to replace hands-on training. It is to be used in conjunction with these for training purposes only.

TENSION HOOK CABLE

Task Training Guide

STS Reference Number/Title:	28.2.6., Tension hook cable.
	1. 35E8 series Technical Orders (TOs): 1.1. TO 35E8-2-1-101, USAF Aircraft Arresting Systems. 1.2. TO 35E8-2-10 Series/Work-cards, MAAS Operation and Service. 2. TO 38G2-89 Series, Wisconsin Engines. 3. Career Development Course (CDC) 3E052B Volume 3, Unit 6: *Mobile Aircraft Arresting System.* 4. AFI 32-1043, *Management of Aircraft Arresting Systems*. 5. CD-ROM Air Force Qualification Training Package (AFQTP) 3E0X2 Electrical Power Production, Version 1.0, Nov 97: *Mobile Aircraft Arresting System (MAAS).* 6. Local Procedures.
Prerequisites:	1. **Possess as a minimum a 3E032 AFSC.** 2. **Review the following references:** 2.1. Review CDC 3E052B Volume 3, Unit 6. 2.2. 35E8 series TOs. 2.3. 38G2-89 series TOs. 3. **Complete** CD-ROM AFQTP Electrical Power Production, Version 1.0, Nov 97: *Mobile Aircraft Arresting System (MAAS).*
Required:	1. Computer to support AFQTP CD-ROMs. 2. Applicable technical references. 3. MAAS. 4. Personal safety equipment. 5. General tool kit.
	Tension hook cable.
Samples of Behavior:	Trainee will be able to place tension on the hook cable.
Notes:	
1. To successfully complete this element follow the steps outlined in the applicable technical manual exactly--no exceptions. 2. Any safety violation is an automatic failure.	

Notice. This AFQTP is *NOT* intended to replace the applicable technical references nor is it intended to replace hands-on training. It is to be used in conjunction with these for training purposes only.

TENSION HOOK CABLE

1. Background. With the arresting barrier in battery position, the aircraft engages the hook cable and causes the nylon tapes to pay out. The-braking system is activated by the rotation of the tape storage drums and the aircraft is brought safely to a stop.

2. Complete the CD-ROM AFQTP 3E0X2 Electrical Power Production, Version 1.0, Nov 97: Mobile Aircraft Arresting System (MAAS) for detailed instruction on how to apply tension to the hook cable. ***After completing the CD-ROM AFQTP see your Unit Education and Training Manager to take the mandatory CerTest # 8012, MAAS QTP, Lesson 3. Trainee must score at least 80% to meet the minimum completion requirements for diamond tasks.***

> **NOTE:**
> The review questions for this material are in the above-mentioned CD-ROM.

3. If the equipment is available, then perform the following steps:

3.1. START THE RETRACT ENGINE.

> **CAUTION:**
> **1. WARM UP ENGINE.**
> **2. DON'T RACE ENGINE.**

Step 1: Pull the over center clutch handle clockwise to disengage the clutch.

Step 2: Pull the manual throttle control out about one inch.

Step 3: Pull out carburetor choke control.

Step 4: Turn ignition switch clockwise to "start" position. If starting difficulty is experienced, do not "grind away" at the starter, but rather attempt short intermittent starting cycles.

Step 5: Release the starter control as soon as the engine starts.

Step 6: After the engine starts, push in choke control as required for smooth running. Choke control must be completely in when engine is warmed up.

Step 7: After warm-up, place manual throttle control in a position that operates engine at 1,000 ±100 rpm on engine tachometer.

Notice. This AFQTP is *NOT* intended to replace the applicable technical references nor is it intended to replace hands-on training. It is to be used in conjunction with these for training purposes only.

3.2. TENSION HOOK CABLE.

SAFETY:

STAY SUFFICIENTLY BACK FROM THE MAAS HOOK CABLE SINCE IT WILL SWING BACK. SERIOUS INJURY TO PERSONNEL MAY RESULT.

NOTE:

A signalman should be positioned at the center of the runway after engagement to control the return of the hook cable.

Step 1: Push manual shuttle lever to "Off".

Step 2: First engage the over center clutch at idle rpm.

Step 3: Open throttle on rewind engine to approximately 1,500 rpm on tachometer.

Step 4: Operator on the opposite side ensures his/her side tape connector is in final position (approximately 7- ½ ft from runway edge sheaves). And their side MAAS brakes on in the "on" position. Then signal, " brakes locked" to the tension side operator.

Step 5: Open throttle to 2,500 rpm.

Step 6: To pretension hook cable, maintain full clutch engagement with rewind engine at 2,500 rpm and push down on reset lever on shuttle valve to apply static pressure to brakes.

Step 7: Release rewind clutch actuator handle.

Step 8: Throttle rewind engine back to the idle rpm and disengage clutch.

Notice. This AFQTP is *NOT* intended to replace the applicable technical references nor is it intended to replace hands-on training. It is to be used in conjunction with these for training purposes only.

TENSION HOOK CABLE

PERFORMANCE CHECKLIST

INSTRUCTIONS:

The trainee must satisfactorily perform all parts of the task without assistance. Evaluate the trainee's performance using this checklist.

DID THE TRAINEE….?	YES	NO
Start the Retract Engine.		
1. Properly start the MAAS rewind engine		
2. Push manual shuttle lever to "Off"		
3. Engage the over center clutch at idle rpm		
4. Open throttle on rewind engine to approximately 1,500 rpm on tachometer		
Tension hook cable.		
1. Ensure the operator on the opposite side ensured his/her side tape connector was in the final position (approximately 7- ½ ft from runway edge sheaves)		
2. Get the signal from the "lock-down" side a " brakes locked" signal		
3. Open throttle to 2,500 rpm		
4. Pretension the hook cable by maintaining full clutch engagement with rewind engine at 2,500 rpm and push down on the reset lever on the shuttle valve to apply static pressure to brakes		
5. Release rewind clutch actuator handle		
6. Throttle rewind engine back to the idle RPM and disengage clutch		
7. Comply with all safety requirements		

FEEDBACK: Trainer should provide both positive and/or negative feedback to the trainee immediately after the task is performed. This will ensure the issue is still fresh in the mind of both the trainee and trainer.

Notice. This AFQTP is *NOT* intended to replace the applicable technical references nor is it intended to replace hands-on training. It is to be used in conjunction with these for training purposes only.

MOBILE AIRCRAFT ARRESTING SYSTEM (MAAS)

PERFORM UNIDIRECTIONAL INSTALLATION

MODULE 28 **AFQTP UNIT 2**

PROOFLOAD INSTALLATION (28.2.7.)

Notice. This AFQTP is *NOT* intended to replace the applicable technical references nor is it intended to replace hands-on training. It is to be used in conjunction with these for training purposes only.

PROOFLOAD INSTALLATION

Task Training Guide

STS Reference Number/Title:	28.2.7., Proofload installation.
Training References:	1. 35E8 series Technical Orders (TOs): 1.1. TO 35E8-2-1-101, USAF Aircraft Arresting Systems. 1.2. TO 35E8-2-10 Series/Work-cards, MAAS Operation and Service. 2. TO 38G2-89 Series, Wisconsin Engines. 3. Career Development Course (CDC) 3E052B Volume 3, Unit 6: *Mobile Aircraft Arresting System.* 4. AFI 32-1043, *Management of Aircraft Arresting Systems*. 5. CD-ROM Air Force Qualification Training Package (AFQTP) 3E0X2 Electrical Power Production, Version 1.0, Nov 97: *Mobile Aircraft Arresting System (MAAS).* 6. Local Procedures.
Prerequisites:	1. **Possess as a minimum a 3E032 AFSC.** 2. **Review the following references:** 2.1. Review CDC 3E052B Volume 3, Unit 6. 2.2. 35E8 series TOs. 2.3. 38G2-89 series TOs. 3. **Complete** CD-ROM AFQTP Electrical Power Production, Version 1.0, Nov 97: *Mobile Aircraft Arresting System (MAAS).*
Required:	1. Computer to support AFQTP CD-ROMs. 2. Applicable technical references. 3. MAAS. 4. Personal safety equipment. 5. General tool kit.
	Proofload MAAS installation.
	Trainee will be able to proofload MAAS installation.
Notes:	
1. To successfully complete this element follow the steps outlined in the applicable technical manual exactly--no exceptions. 2. Any safety violation is an automatic failure.	

Notice. This AFQTP is *NOT* intended to replace the applicable technical references nor is it intended to replace hands-on training. It is to be used in conjunction with these for training purposes only.

PROOFLOAD INSTALLATION

1. Background. With the arresting barrier in battery position, the aircraft engages the hook cable and causes the nylon tapes to pay out. The-braking system is activated by the rotation of the tape storage drums and the aircraft is brought safely to a stop. To check integrity of the installation, seat the anchor assemblies on expeditionary assemblies and fairlead beams, it is necessary to impose a load on the nylon tapes similar to loading experience during aircraft arrestments.

Proof loading is not mandatory under combat or emergency conditions. It is recommended if time permits. To check the integrity of any installation, it is necessary to impose a load in the nylon tape similar to the loading experienced during an aircraft engagement.

2. Complete the CD-ROM AFQTP 3E0X2 Electrical Power Production, Version 1.0, Nov 97: Mobile Aircraft Arresting System (MAAS) for detailed instruction on how to proofload a MAAS installation. ***After completing the CD-ROM AFQTP see your Unit Education and Training Manager to take the mandatory CerTest # 8012, MAAS QTP, Lesson 3. Trainee must score at least 80% to meet the minimum completion requirements for diamond tasks.***

> **NOTE:**
> The review questions for this material are in the above-mentioned CD-ROM.

3. If the equipment is available, then perform the following steps:

3.1. The following procedure should be used to proof load the installation to 18,000 lb.

Step 1: Move the shuttle valve lever to the "Off" position.

Step 2: Disconnect the hydraulic line to the brake on the hydraulic side of the energy absorber at the tee connection to the shuttle valve and cap the tee. Use the cap from the end of the utility pump hose.

Step 3: Connect a utility pump and hose assembly to the brake hydraulic line.

Step 4: Attach the tape connector to a vehicle tow point having a minimum pull of 18,000 lb. Pull the tape from the storage reel slowly until the tape connector is approximately 450 ft down the runway.

Step 5: Stop the vehicle.

Step 6: Apply approximately 1,800 psig to lock the brake using the utility pump.

Step 7: Move the vehicle forward until the tape is taut, but not actually loaded.

Step 8: Mark the location of the tape connector on the runway.

Step 9: Mark a second point 23 ft further in the direction of tow.

Notice. This AFQTP is *NOT* intended to replace the applicable technical references nor is it intended to replace hands-on training. It is to be used in conjunction with these for training purposes only.

SAFETY:

BEFORE PROCEEDING, INSURE THAT THE AREA BETWEEN THE TOW VEHICLE AND LEAD-OFF SHEAVE IS CLEAR OF ALL PERSONNEL AND EQUIPMENT. FAILURE TO COMPLY MAY RESULT IN SERIOUS INJURY TO PERSONNEL OR EQUIPMENT.

Step 10: Using the vehicle, stretch the tape to the second point.

10.1. Check the arresting system for any movement.

10.2. Relax the load on the tape and tighten components as required.

10.3. Turnbuckles should be adjusted to maintain alignment and to minimize equipment movement under load.

Step 11: Reload the tape with the required stretch a minimum of three times. Inspect the arresting system for component movement after each test and tighten or adjust as required.

Step 12: Disconnect the utility pump and hose assembly and reconnect the hydraulic line to the tee fitting. Replace the cap on the utility pump hose.

Step 13: Start the rewind engines per TO 35E8-2-10-1, Paragraph 4-4.1.3.

Step 14: Rewind the tape per TO 35E8-2-10-1, Paragraph 4-4.1.5.

Step 15: Shut down the rewind engines per TO 35E8-2-10-1, Paragraph 4-4.1.8.

Step 16: Bleed brakes per TO 35E8-2-10-1, Paragraph 5-2.4.16.

Notice. This AFQTP is *NOT* intended to replace the applicable technical references nor is it intended to replace hands-on training. It is to be used in conjunction with these for training purposes only.

PROOFLOAD INSTALLATION

PERFORMANCE CHECKLIST

INSTRUCTIONS:

The trainee must satisfactorily perform all parts of the task without assistance. Evaluate the trainee's performance using this checklist.

DID THE TRAINEE….?	YES	NO
1. Move the shuttle valve lever to the "Off" position		
2. Disconnect the hydraulic line to the brake on the hydraulic side of the energy absorber at the tee connection to the shuttle valve and cap the tee		
3. Connect a utility pump and hose assembly to the brake hydraulic line		
4. Attach the tape connector to a vehicle tow point having a minimum pull of 18,000 lb		
5. Pull the tape from the storage reel slowly until the tape connector is approximately 450 ft down the runway		
6. Stop the vehicle		
7. Apply approximately 1,800 psig to lock the brake using the utility pump		
8. Move the vehicle forward until the tape is taut, but not actually loaded		
9. Mark the location of the tape connector on the runway		
10. Mark a second point 23 ft further in the direction of tow		
11. Ensure that the area between the tow vehicle and lead-off sheave is clear of all personnel and equipment.		
12. Use the vehicle to stretch the tape to the second point		
13. Check the arresting system for any movement		
14. Relax the load on the tape and tighten components as required		
15. Adjust the turnbuckles to maintain alignment and to minimize equipment movement under load		
16. Reload the tape with the required stretch a minimum of three times		
17. Inspect the arresting system for component movement after each test and tighten or adjust as required		
18. Disconnect the utility pump and hose assembly and reconnect the hydraulic line to the tee fitting		
19. Replace the cap on the utility pump hose		
20. Start the rewind engines per TO 35E8-2-10-1, Paragraph 4-4.1.3		
21. Rewind the tape per TO 35E8-2-10-1, Paragraph 4-4.1.5		
22. Shut down the rewind engines per TO 35E8-2-10-1, Paragraph 4-4.1.8		
23. Bleed brakes per TO 35E8-2-10-1, Paragraph 5-2.4.16		
24. Comply with all safety requirements		

FEEDBACK: Trainer should provide both positive and/or negative feedback to the trainee immediately after the task is performed. This will ensure the issue is still fresh in the mind of both the trainee and trainer.

Notice. This AFQTP is *NOT* intended to replace the applicable technical references nor is it intended to replace hands-on training. It is to be used in conjunction with these for training purposes only.

MOBILE AIRCRAFT ARRESTING SYSTEM (MAAS)

PERFORM MAAS PERIODIC INSPECTION AND PREVENTIVE MAINTENANCE

MODULE 28 **AFQTP UNIT 2**

DAILY (28.2.9.1.)

Notice. This AFQTP is *NOT* intended to replace the applicable technical references nor is it intended to replace hands-on training. It is to be used in conjunction with these for training purposes only.

DAILY PERIODIC INSPECTION AND PREVENTIVE MAINTENANCE

Task Training Guide

STS Reference Number/Title:	28.2.9.1., Daily periodic inspection and preventive maintenance.
Training References:	1. 35E8 series Technical Orders (TOs): 1.1. TO 35E8-2-1-101, USAF Aircraft Arresting Systems. 1.2. TO 35E8-2-10 Series/Work-cards, MAAS Operation and Service. 1.3. TO 35E8-2-2 Series/Work-cards, MA-1A Operation and Service. 1.4. TO 35E82-5 Series/Work-cards, BAK-12 Operation and Service. 2. TO 38G2-89 Series, Wisconsin Engines. 3. Career Development Course (CDC) 3E052B Volume 3, Unit 6: *Mobile Aircraft Arresting System.* 4. AFI 32-1043, *Management of Aircraft Arresting Systems*. 5. CD-ROM Air Force Qualification Training Package (AFQTP) 3E0X2 Electrical Power Production, Version 1.0, Nov 97: *Mobile Aircraft Arresting System (MAAS).* 6. Local Procedures.
Prerequisites:	1. **Possess as a minimum a 3E032 AFSC.** 2. **Review the following references:** 2.1. Review CDC 3E052B Volume 3, Unit 6. 2.2. 35E8 series TOs. 2.3. 38G2-89 series TOs. 3. **Complete** CD-ROM AFQTP Electrical Power Production, Version 1.0, Nov 97: *Mobile Aircraft Arresting System (MAAS).*
Required:	1. Computer to support AFQTP CD-ROMs. 2. Applicable technical references. 3. MAAS. 4. Personal safety equipment. 5. General tool kit.
	Daily periodic inspection and preventive maintenance.
Samples of Behavior:	Trainee will be able to perform daily periodic inspection and preventive maintenance for the MAAS.
Notes:	
1. To successfully complete this element follow the steps outlined in the applicable technical manual exactly--no exceptions. 2. Any safety violation is an automatic failure.	

Notice. This AFQTP is *NOT* intended to replace the applicable technical references nor is it intended to replace hands-on training. It is to be used in conjunction with these for training purposes only.

DAILY PERIODIC INSPECTION AND PREVENTIVE MAINTENANCE

1. Background. In order to maintain the arresting systems in peak operating condition, these required inspections must be performed daily. Inspections must be completed before the beginning of scheduled flying operations and must be performed everyday including weekends and holidays.

The following items are checked daily on the aircraft arresting system; the static accumulator, reservoir, cam, instrument gauges, leaks, engine, and for any safety hazards. All these are very critical in keeping the system in operational readiness.

2. Complete the CD-ROM AFQTP 3E0X2 Electrical Power Production, Version 1.0, Nov 97: Mobile Aircraft Arresting System (MAAS) for detailed instructions on daily inspections. ***After completing the CD-ROM AFQTP see your Unit Education and Training Manager to take the mandatory CerTest # 8016, MAAS QTP, Lesson 7. Trainee must score at least 80% to meet the minimum completion requirements for diamond tasks.***

> **NOTE:**
> The review questions for this material are in the above-mentioned CD-ROM.

3. If the equipment is available, then perform the following steps:

Step 1: PRIOR TO LEAVING SHOP.

1.1. Review the Barrier Maintenance Schedule calendar, status board, and Barrier Maintenance log book. Personnel should review the barrier logbook for any items that pertain to the aircraft arresting system. Personnel should review the barrier maintenance status board for any maintenance due for that day.

1.2. Update the Logbook. The barrier maintenance log book should be updated prior of leaving the shop by entering the day, date, time, weather conditions, active runway, personnel on duty, any comments or information on the aircraft arresting system from the Fire dept. log book, and enter any maintenance actions planned to be accomplished for that day.

1.3. Ensure appropriate supplies, equipment, tools, and technical orders are on hand. Ensure that all materials, equipment and work cards, checklist, or TOs are available to accomplish the work planned for that day.

1.4. Inspect Barrier Maintenance vehicle. Inspect the barrier maintenance vehicle in accordance with the checklist on the AF Form 1800, prior to starting vehicle. Sign off the 1800 next to the date the vehicle was inspected.

1.4.1. Perform Radio checks on all radios with Fire Dept., Base Ops, and Tower.

1.4.2. Ensure vehicle's emergency lights are operational.

1.4.3. Ensure each person uses ear protection before starting engines.

Step 2: RUNWAY INSPECTION. It is recommended that this inspection be performed first, as flying may start before its scheduled time.

Notice. This AFQTP is *NOT* intended to replace the applicable technical references nor is it intended to replace hands-on training. It is to be used in conjunction with these for training purposes only.

NOTE:
Perform vehicle foreign object damage (FOD) checks before entering and leaving the runway and entering the Taxiway.

2.1. Inspect deck sheave, tape sweep area, and approach area for debris and obstructions, and cleanliness. The runway surface must be checked for any debris or obstructions. The recommended area is 200 feet on both sides of the cable. This check will reduce the possibility of hook skip. The sheaves are checked for debris or obstructions that could cause tape damage or cause the rollers to stop turning during an arrestment.

2.2. Inspect cable for kinks, separation, flat spots, broken wires, and wear. The cable needs to be checked visually for any kinking, evidence of a pulled through kink, broken wires, excessive wear and opening of the cable strands. The pendant cable shall be replaced when any of the following conditions exit.

2.2.1. KINK: A sharp kink that cannot be removed by pretension.

2.2.2. CABLE STRANDS: Opening of the cable strands, strand or wire distortion (normal lay pattern) or deviation from a straight line of cable axis indicating a pulled through kink. Opening of the cable strand is defined as a gap exceeding 0.187 inches.

2.2.3. BROKEN WIRES: Five or more broken wires within one rope lay (all strands). A lay is defined as one complete revolution of a strand. Any time 9 or more broken wires are discovered over the length of the cable.

2.2.4. WEAR: A pendant is considered to be excessively worn when there are 30 or more flat spots, 1/2 inch or more in one rope lay (all wires). This flattening of the wire crowns is caused by abrasion from the runway contact.

2.3. Check support disks for proper spacing and condition.

2.3.1. The spacing of the pendant support discs is inspected for proper spacing of 8-10 feet apart. There are pre-marked indicators on the runway for ease of spacing after an arrestment, by the 1 x 4" red diagonal marks on the runway.

2.3.2. These support discs are considered distortional, cracked, and worn when the disc can no longer support the cable to the minimum height.

2.3.3. Paint two center support discs. Painting the two center donuts aids in a speedy spacing after engagements.

2.4. Inspect tape connectors for correct reeving and security of hardware.

2.4.1. The tape connector must be reeved in the following manner; tape, metal, tape, metal and the flat edge of the clamp should be facing outward.

2.4.2. The tape connector has wear lines next to the edge of the connector, and when these wear lines are exceeded the tape connector must be replaced.

2.4.3. The tape connector has set screws; one to keep the nut from loosing during tape connector movement, and two set screws, one on each side of the connector, keeping the connector together. These screws must be checked daily to ensure proper hardware security.

2.5. Inspect tape connectors for proper position.

Notice. This AFQTP is *NOT* intended to replace the applicable technical references nor is it intended to replace hands-on training. It is to be used in conjunction with these for training purposes only.

2.6. Inspect exposed tapes for wear and foreign material.

2.7. Ensure tires are secure on tape connectors. Before leaving the tape connector, ensures that the tire is placed on the tape connectors, to minimize tape connector wear during an aircraft arrestment**.**

2.8. Ensure fairlead beam covers are secure.

2.9. Ensure appropriate supplies, equipment; tools and technical orders are accounted for and in proper place before leaving the runway.

Step 3: BARRIER SYSTEM INSPECTION. To begin with, ensure you have a set of work cards or technical orders. These items are highly recommended for the inspection of the aircraft arresting system.

3.1. Check cam pump drive chains for proper installation.

3.2. Check control valve and cam for freedom from paint, dirt, and corrosion.

3.3. Check engine oil level. Before starting the engine, you should check the oil for proper level. The oil dipstick is located on the left side of the engine.

3.4. You should check fuel prior to staring engine, to ensure enough fuel is available for the engine, after an arrestment.

3.4.1. The fuel tank is located on the weldment base of the rewind side of the unit.

3.4.2. The fuel tank has a fuel level gauge located on the top of the fuel tank.

3.4.3. This fuel level gauge is not always accurate, so checking the fuel in the tank visually by removing the cap is highly recommended.

3.5. Operate rewind engine for 10 to 15 minutes. Operating the engine for 10-15 minutes a day ensures the engine is operational, allows enough time to charge the battery, and allows the engine to blow out existing carbon.

3.5.1. Starting Procedures:

3.5.1.1. You first, pull the ignition switch to the on position.

3.5.1.2. Pull the manual throttle out about one-inch.

3.5.1.3. Pull the choke control full way out.

3.5.1.4. Push the starter control in.

3.5.1.4.1. After the first revolution of the engine push the choke control in. In cold weather, you may have to leave the choke control out two or three revolutions of the engine.

3.5.1.4.2. If starting is difficulty is experienced, do not grind away at the starter, but rather attempt short intermittent starting cycles.

3.5.1.4.3. The engine should be allowed to warm up to operating temperature before the load is applied. Racing an engine or gunning it, to hurry the warm-up period, is very destructive to the polished wearing surface on pistons, rings, cylinders, bearings, etc.

3.5.1.4.4. If necessary to crank more than once, allow starter to cool for one minute after each 30-second cranking period to avoid overheating the starting motor.

3.5.1.4.5. Do not attempt to engage starter while engine flywheel is turning. After any unsuccessful starting attempt, allow engine to come to a full stop before attempting to reengage starter.

Notice. This AFQTP is *NOT* intended to replace the applicable technical references nor is it intended to replace hands-on training. It is to be used in conjunction with these for training purposes only.

3.5.1.4.6. If flooding should occur, do not use choke, keep the choke push in and continue cranking.

3.5.1.5. Place manual throttle control in a position, which operates at 1000+/10 rpm on engine tachometer, and allow to warm up (2-3 min.).

3.5.1.6. Open the throttle control cable in a position, which operates at 2500 +/50 rpm.

3.5.2. Shut Down:

3.5.2.1. Idle engines at 1000 +/100 rpm for 2-3 minutes to allow engine to cool prior to shut down.

3.5.2.2. Place the ignition switch in the off position.

3.6. Inspect cable for proper tension.

3.6.1. With the engine at 2500 +/- 100 rpm.

3.6.2. Push manual shuttle valve lever to the off position.

3.6.3. Pick up clutch actuator handle from the stake hole on the left side of the instrument control panel.

3.6.4. Insert handle into the actuator clutch, located on the right side of the instrument control panel.

3.6.5. Depressing the clutch actuator handle to engage clutch.

3.7. Inspect cam for zero setting. Inspect the zero cam position when the tapes are fully retracted and the pendant is tensioned in the battery position.

3.7.1. The location of the cam is directly beneath the static accumulator.

3.7.2. The zero degree index on the cam should be in line with the center of the cam follower; that is adjacent to the cam.

3.8. Inspect brakes, fittings, and all connections for leaks. The whole system should be checked for any type of hydraulic leaks, such as, fittings, brakes, and components.

3.8.1. The location for looking for leaks from the brakes is underneath the brake assembly and around each of the pucks.

3.8.1.1. Due to the lack of movement of the piston assemblies within the brake assembly, seals may not receive proper lubrication and leakage may occur.

3.8.1.2. Cycling of the brakes through the use of the shuttle valve may correct the leakage.

3.8.1.3. Leaking brakes that cannot be corrected by cycling may be required replacement.

3.8.2. The location for looking for leaks from the hydraulic pump is underneath the pump.

Step 4: INSTRUMENT CONTROL PANEL. The instrument control panel contains all the controls and instruments for operating the rewind engine, and instruments for monitoring the system in the event of an arrestment. The pressure and tachometer gauges are used for monitoring the arresting gear performance during such an event. Ensuring that these gauges are set properly is essential for actual reading during an arrestment.

4.1. Inspect tell-tale tachometer for zero setting. The tachometer gauge should be set to zero, and the telltale needle should indicate the same reading.

4.2. Inspect tell-tale pressure gauge for proper pressure reading. The pressure gauge should read approximately 175 psi. and the telltale needle should be set to the setting.

Notice. This AFQTP is *NOT* intended to replace the applicable technical references nor is it intended to replace hands-on training. It is to be used in conjunction with these for training purposes only.

4.3. Inspect accumulator for proper fluid level. The static accumulator is located on the hydraulic side of the unit. The accumulator needs to be checked for proper fluid level. The sight glass is located at the lower end of the accumulator. This fluid level must be maintained midpoint of the sight glass.

4.4. Inspect static pressure gauge for proper pressure. (175+/-10 psi.) The accumulator has a pressure gauge located in the upper portion of the accumulator. This should have a pressure reading of 175-/+10 psi. If not it requires immediate refilling. To charge the static accumulator with nitrogen. The following steps should be taken:

4.4.1. Remove the dust cover.

4.4.2. Install the accumulator charging hose to the nitrogen bottle using the straight end fitting of the charging hose.

4.4.3. Attach the "L" shape end of the charging hose to the Schrader valve connection.

4.4.4. Blow the charging hose with nitrogen, to clean inside of hose.

4.4.5. With the sight glass at the midway point, hydraulic fluid charge the static to 175 +/10 psig as read on the accumulator pressure gauge.

4.5. Inspect reservoir for proper fluid level. The hydraulic reservoir is checked for proper fluid level. It is located to the left of the accumulator and cam index.

4.5.1. The fluid level should be maintained to approximately one inch of the sight glass of hydraulic fluid.

4.5.2. Some shops practice is that the fluid level be between the two red lines of the reservoir sight glass.

4.6. Check all areas for loose, damage, missing items, or obstructions to the system.

4.7. Annotate the AF Form 244 or Barrier board. To complete the daily inspection you must sign the AFTO Form 224, with your initials and the time above the date completed, in sec. II of this form.

4.8. Ensure barrier is secure. Once all of the following has been completed in accordance with the technical order or work cards, ensure that all the gauges have been reset and that the lights are turned off, and there are no safety hazards present when leaving the sheds.

Step 5: UPDATE BARRIER MAINTENANCE LOGBOOK. Update barrier maintenance log by entering what time the daily inspections was completed and any maintenance performed, and any problems occurred.

Notice. This AFQTP is *NOT* intended to replace the applicable technical references nor is it intended to replace hands-on training. It is to be used in conjunction with these for training purposes only.

DAILY PERIODIC INSPECTION AND PREVENTIVE MAINTENANCE

PERFORMANCE CHECKLIST

INSTRUCTIONS:

The trainee must satisfactorily perform all parts of the task without assistance. Evaluate the trainee's performance using this checklist.

DID THE TRAINEE….?	YES	NO
PRIOR TO LEAVING SHOP.		
1. Review the Barrier Maintenance Schedule calendar, status board, and Barrier Maintenance logbook		
2. Update the logbook		
3. Ensure appropriate supplies, equipment, tools, and technical orders are on hand		
4. Inspect Barrier Maintenance vehicle in accordance with the AF Form 1800 and sign off on the 1800		
5. Perform Radio checks on all radios with Fire Dept., Base Ops, and Tower		
6. Ensure vehicle's emergency lights are operational		
7. Ensure each person uses ear protection before starting engines		
RUNWAY INSPECTION.		
8. Perform vehicle FOD checks before entering and leaving the runway and entering the taxiway		
9. Inspect deck sheave, tape sweep area, and approach area for debris and obstructions, and cleanliness		
10. Inspect cable for kinks, separation, flat spots, broken wires, and wear		
11. Check support disks for proper spacing and condition		
12. Paint two center support discs		
13. Inspect tape connectors for correct reeving and security of hardware		
14. Inspect tape connectors for proper position		
15. Inspect exposed tapes for wear and foreign material		
16. Ensure tires are secure on tape connectors		
17. Ensure fairlead beam covers were secure		
BARRIER SYSTEM INSPECTION.		
18. Check cam pump drive chains for proper installation		
19. Check control valve and cam for freedom from paint, dirt, and corrosion		
20. Check engine oil level		
21. Check engine fuel level		
22. Operate rewind engine for 10 to 15 minutes		
23. Inspect cable for proper tension		
24. Inspect cam for zero setting		
25. Inspect brakes, fittings, and all connections for leaks		
26. Inspect tell-tale tachometer for zero setting		
27. Inspect tell-tale pressure gauge for proper pressure reading		

Notice. This AFQTP is *NOT* intended to replace the applicable technical references nor is it intended to replace hands-on training. It is to be used in conjunction with these for training purposes only.

PERFORMANCE CHECKLIST (Continued)

DID THE TRAINEE….?	YES	NO
28. Inspect accumulator for proper fluid level		
29. Inspect static pressure gauge for proper pressure (175+/-10 psi.)		
30. Inspect reservoir for proper fluid level		
31. Check all areas for loose, damage, missing items, or obstructions to the system		
32. Annotate the AF Form 244 or Barrier board		
33. Ensure appropriate supplies, equipment, tools, and technical orders were accounted for and in their proper place before leaving the runway		
34. Update the Barrier Maintenance logbook		
35. Comply with all safety requirements		

FEEDBACK: Trainer should provide both positive and/or negative feedback to the trainee immediately after the task is performed. This will ensure the issue is still fresh in the mind of both the trainee and trainer.

Notice. This AFQTP is *NOT* intended to replace the applicable technical references nor is it intended to replace hands-on training. It is to be used in conjunction with these for training purposes only.

MOBILE AIRCRAFT ARRESTING SYSTEM (MAAS)

PERFORM MAAS PERIODIC INSPECTION AND PREVENTIVE MAINTENANCE

MODULE 28 **AFQTP UNIT 2**

WEEKLY (28.2.9.2.)

Notice. This AFQTP is *NOT* intended to replace the applicable technical references nor is it intended to replace hands-on training. It is to be used in conjunction with these for training purposes only.

WEEKLY PERIODIC INSPECTION AND PREVENTIVE MAINTENANCE

Task Training Guide

STS Reference Number/Title:	28.2.9.2., Weekly periodic inspection and preventive maintenance.
Training References:	1. 35E8 series Technical Orders (TOs): 1.1. TO 35E8-2-1-101, USAF Aircraft Arresting Systems. 1.2. TO 35E8-2-10 Series/Work-cards, MAAS Operation and Service. 1.3. TO 35E8-2-2 Series/Work-cards, MA-1A Operation and Service. 1.4. TO 35E82-5 Series/Work-cards, BAK-12 Operation and Service. 2. TO 38G2-89 Series, Wisconsin Engines. 3. Career Development Course (CDC) 3E052B Volume 3, Unit 6: *Mobile Aircraft Arresting System.* 4. AFI 32-1043, *Management of Aircraft Arresting Systems*. 5. CD-ROM Air Force Qualification Training Package (AFQTP) 3E0X2 Electrical Power Production, Version 1.0, Nov 97: *Mobile Aircraft Arresting System (MAAS).* 6. Local Procedures.
Prerequisites:	1. **Possess as a minimum a 3E032 AFSC.** 2. **Review the following references:** 2.1. Review CDC 3E052B Volume 3, Unit 6. 2.2. 35E8 series TOs. 2.3. 38G2-89 series TOs. 3. **Complete** CD-ROM AFQTP Electrical Power Production, Version 1.0, Nov 97: *Mobile Aircraft Arresting System (MAAS).*
Equipment/Tools Required:	1. Computer to support AFQTP CD-ROMs. 2. Applicable technical references. 3. MAAS. 4. Personal safety equipment. 5. General tool kit.
	Weekly periodic inspection and preventive maintenance.
Samples of Behavior:	Trainee will be able to perform weekly periodic inspection and preventive maintenance for the MAAS.
Notes:	
1. To successfully complete this element follow the steps outlined in the applicable technical manual exactly--no exceptions. 2. Any safety violation is an automatic failure.	

Notice. This AFQTP is *NOT* intended to replace the applicable technical references nor is it intended to replace hands-on training. It is to be used in conjunction with these for training purposes only.

WEEKLY PERIODIC INSPECTION AND PREVENTIVE MAINTENANCE

1. Background. In order to maintain the arresting systems in peak operating condition, these required inspections must be performed weekly. Inspections must be completed before the beginning of scheduled flying operations.

2. Complete the CD-ROM AFQTP 3E0X2 Electrical Power Production, Version 1.0, Nov 97: Mobile Aircraft Arresting System (MAAS) for detailed instructions on weekly inspections. ***After completing the CD-ROM AFQTP see your Unit Education and Training Manager to take the mandatory CerTest # 8016, MAAS QTP, Lesson 7. Trainee must score at least 80% to meet the minimum completion requirements for diamond tasks.***

> **NOTE:**
> The review questions for this material are in the above-mentioned CD-ROM.

3. If the equipment is available, then perform the following steps:

Step 1: PRIOR TO LEAVING SHOP.

1.1. Review the Barrier Maintenance Schedule calendar, status board, and Barrier Maintenance log book. Personnel should review the barrier logbook for any items that pertain to the aircraft arresting system. Personnel should review the barrier maintenance status board for any maintenance due for that day.

1.2. Update the Logbook. The barrier maintenance log book should be updated prior of leaving the shop by entering the day, date, time, weather conditions, active runway, personnel on duty, any comments or information on the aircraft arresting system from the Fire dept. log book, and enter any maintenance actions planned to be accomplished for that day.

1.3. Ensure appropriate supplies, equipment, tools, and technical orders are on hand. Ensure that all materials, equipment and work cards, checklist, or TOs are available to accomplish the work planned for that day.

1.4. Inspect Barrier Maintenance vehicle. Inspect the barrier maintenance vehicle in accordance with the checklist on the AF Form 1800, prior to starting vehicle. Sign off the 1800 next to the date the vehicle was inspected.

1.4.1. Perform Radio checks on all radios with Fire Dept., Base Ops, and Tower.

1.4.2. Ensure vehicle's emergency lights are operational.

1.4.3. Ensure each person uses ear protection before starting engines.

Step 2: RUNWAY INSPECTION. It is recommended that this inspection be performed first, as flying may start before its scheduled time.

2.1. Inspect tape for localize wear.

2.2. The nylon tapes should be inspected for wear or damage especially near the tape connector, whenever possible. The wear on individual tapes as a result of abrasion on the runway will vary considerably, depending on the exact conditions of the runway surface.

Notice. This AFQTP is *NOT* intended to replace the applicable technical references nor is it intended to replace hands-on training. It is to be used in conjunction with these for training purposes only.

Step 3: BARRIER SYSTEM INSPECTION. To begin with, ensure you have a set of workcards/checklists and technical orders when performing the following:

3.1. Inspect system for worn and loose parts and security of anchor assemblies.

3.1.1. Loose or worn parts. You will inspect the entire system for loose or worn parts and anchor assemblies for security.

3.1.2. Bolts for security.

3.1.2.1. This includes the eight anchor bolts that hold the unit in place.

3.1.2.2. The engine bolts.

3.1.2.3. The hydraulic pump bolts.

3.1.2.4. The pillow block bolts.

3.1.2.5. The clutch assembly.

3.1.2.6. Check all other components.

3.1.3. Sprockets.

3.1.3.1. Engine sprocket.

3.1.3.2. Cam sprocket.

3.1.3.3. Tensioner sprocket.

3.1.4. Fairlead Beam.

3.1.4.1. Turnbuckles.

3.1.4.2. Spacers.

3.2. Inspect all fittings and lines for leaks.

3.3. Inspect chains for cleanliness and lubrication. All the drive chains are checked for cleanliness and lubrication. It is not necessary to lubricate all the chains, unless it is necessary.

3.3.1. Rewind chain.

3.3.2. Gear reducer chain.

3.3.3. Cam chain and hydraulic pump chain.

3.3.4. Synchronization chain.

3.3.5. Engine chain.

3.4. Inspect Cam Control valve linkage. All parts of the control valve linkage shall be inspected weekly and after each cycling of the arresting barrier either by monthly functional checkout or by an arrestment.

3.4.1. Inspect all parts of the control valve, especially the valve stem and contacting surfaces, for any dirt or foreign material that might obstruct movement. Remove such material by cleaning with dry cleaning solvent.

3.4.2. With the cam set at zero, stroke the valve by pulling the cam follower away from the cam. Repeat at least three times observing the freedom of motion.

3.5. Clean Grease fittings with a cloth damp with dry cleaning solvent. Clean all grease fittings with a cloth dampened with dry cleaning solvent, Military Federal Specification P-D-680, Type II, or equivalent.

3.6. Service Pre-cleaner: The 2291-801 Wisconsin air cleaner has a pre-cleaner. Clean bowl regularly to keep free from dust and dirt. Do not use water or oil in pre-cleaner. This must be kept dry.

Notice. This AFQTP is *NOT* intended to replace the applicable technical references nor is it intended to replace hands-on training. It is to be used in conjunction with these for training purposes only.

3.7. Hydraulic System Bleeding. To ensure that the operational characteristics of the equipment are not effected by entrapped air in the hydraulic system. There is a special kit available for bleeding: consisting of a wrench, a bleeder hose with fitting at one end, and a container.

3.7.1. Arresting engine brakes as bled as follows:

3.7.1.1. Ensure that the shuttle valve is in the on position. This applies accumulator static pressure to the brakes.

3.7.1.2. Starting with rewind side brake; remove the dust covers from the brake. The dust cover will ether be a cap or a screw. Place the cap or screw in the lifting hook on the front base, of the unit.

3.7.1.3. Attach hose to the bleeder valve of the brake.

3.7.1.4. Open bleeder valve and allow approximately one half pint to flow through the plastic tube into a disposable container.

3.7.1.5. After assurance that the tubing is clean. The tubing may be placed in the reservoir vent and the bleeding should be continued while alternately cycling the brake selector to off and on until no air bubbles or surges are observed.

3.7.1.5.1. As the bleeding operation progresses, it will be necessary to re-supply the fluid level in the static accumulator by operating the manual transfer pump.

3.7.1.5.2. You may pump the accumulator up as 300 psig. to accomplish the bleeding process.

3.7.1.6. Bleed the brake located on the control side of the unit, in the same manner as, what has described for the brake on the rewind engine.

3.7.1.7. The tell-tale pressure gauge located on the instrument panel must be bled, at the Allen plug on the right side of the pressure gauge stem. This Allen plug must be cracked only for this bleeding operation, not removed. Loss of the small steel ball located behind the plug will result in continual leakage at the bleed port.

3.7.1.8. Repeat the bleeding cycle at least three times or as required to remove all trapped air from both brakes. Proper bleeding is indicated when the hydraulic fluids flows clear and cherry colored, the same as when it flows from a newly opened can.

3.7.2. Rewind Clutch System. The rewind clutch system is bled as follows:

3.7.2.1. The bleeder port on the clutch must be rotated to top dead center position during the bleeding operation. To rotate the clutch to the desired position, manually turn the fluid coupling at the gear reducer input shaft.

3.7.2.2. Hold the clutch handle in a full up position for ten seconds to fill the reservoir.

3.7.2.3. With the selector valve in the operating position, depress the clutch actuator position, three or four times.

3.7.2.4. As the handle is depressed, open the bleed port while depressing the handle to the bottom.

3.7.2.5. With the clutch pump handle in the down position turn the selector valve handle to the 90^0 position.

3.7.2.6. Then raise the pump handle to the upper most position. This will refill the reservoir in the clutch pump to replace fluid lost in the bleeding operation.

3.7.2.7. Repeat the bleeding cycle as many times as necessary to remove all trapped air from the clutch actuating system.

Notice. This AFQTP is *NOT* intended to replace the applicable technical references nor is it intended to replace hands-on training. It is to be used in conjunction with these for training purposes only.

3.7.2.8. Return the selector valve to the off position when the bleeding operation is completed.

3.8. Inspect Control valve linkage for freedom of movement.

3.8.1. If sticking or sluggishness cannot be overcome:

3.8.1.1. Clean cam control valve linkage with dry cleaning solvent.

3.8.1.2. Lubricate with 10-weight oil.

3.8.2. If sticking or sluggishness cannot be overcome after following the above procedures and stroking the valve 10 times, proceed as follows:

3.8.2.1. Loosen valve-packing nuts and repeat cleaning and lubrication procedures. Re-tighten gradually until nuts are reseated.

3.8.2.2. If these procedures did not improve the action of the control valve linkage. Remove and repair the hydraulic control valve.

3.9. Inspect Fuel Strainer. The fuel strainer shall be inspected for dirt or water, cleaned if dirt or water is present. To remove bowl, first shut off fuelvalve, then loosen the knurled nut below bowl and swing the wire bail to one side. After cleaning bowl with cleaning solvent, resemble the parts, making sure that the gasket is in good condition; otherwise replace the gasket.

3.10. Inspect Water Level In Reservoir. When rapid cycle arrestments are anticipated connect the arresting engine coolant supply line to a 55-gallon reservoir and fill the water. If anti-freeze liquid is required when operating in temperatures below freezing an uninhibited type must be used.

3.11. Inspect Air cleaner. The air cleaner bowl shall be inspected weekly or more frequently if operating in dusty conditions. The air cleaner bowl shall be inspected for dirt. This done by removing the bowl from the cleaner, if the bowl is dirty, wash with cleaning solvent, and replace with clean oil. Do not use water.

3.12. Check Battery Liquid Level. Remove the battery, fill with electrolyte and charge.

Step 4: UPDATE BARRIER MAINTENANCE LOGBOOK.

Notice. This AFQTP is *NOT* intended to replace the applicable technical references nor is it intended to replace hands-on training. It is to be used in conjunction with these for training purposes only.

WEEKLY PERIODIC INSPECTION AND PREVENTIVE MAINTENANCE

PERFORMANCE CHECKLIST

INSTRUCTIONS:

The trainee must satisfactorily perform all parts of the task without assistance. Evaluate the trainee's performance using this checklist.

DID THE TRAINEE….?	YES	NO
PRIOR TO LEAVING SHOP.		
1. Review the Barrier Maintenance Schedule calendar, status board, and Barrier Maintenance logbook		
2. Update the logbook		
3. Ensure appropriate supplies, equipment, tools, and technical orders are on hand		
4. Inspect Barrier Maintenance vehicle in accordance with the AF Form 1800 and sign off on the 1800		
5. Perform Radio checks on all radios with Fire Dept., Base Ops, and Tower		
6. Ensure vehicle's emergency lights are operational		
7. Ensure each person uses ear protection before starting engines		
RUNWAY INSPECTION.		
8. Inspect tape for localize wear		
BARRIER SYSTEM INSPECTION.		
9. Inspect system for worn and loose parts and security of anchor assemblies		
10. Inspect all fittings and lines for leaks		
11. Inspect chains for cleanliness and lubrication		
12. Inspect cam control valve linkage		
13. Clean grease fittings with a cloth damp with dry cleaning solvent		
14. Service pre-cleaner		
15. Bleed the hydraulic systems		
16. Inspect control valve linkage for freedom of movement		
17. Inspect fuel strainer		
18. Inspect water level in reservoir		
19. Inspect air cleaner		
20. Check battery liquid level		
21. Check all areas for loose, damage, missing items, or obstructions to the system		
22. Annotate the AF Form 244 or Barrier board		
23. Ensure appropriate supplies, equipment, tools, and technical orders were accounted for and in their proper place before leaving the runway		
24. Update the Barrier Maintenance logbook		
25. Comply with all safety requirements		

FEEDBACK: Trainer should provide both positive and/or negative feedback to the trainee immediately after the task is performed. This will ensure the issue is still fresh in the mind of both the trainee and trainer.

Notice. This AFQTP is *NOT* intended to replace the applicable technical references nor is it intended to replace hands-on training. It is to be used in conjunction with these for training purposes only.

MOBILE AIRCRAFT ARRESTING SYSTEM (MAAS)

PERFORM MAAS PERIODIC INSPECTION AND PREVENTIVE MAINTENANCE

MODULE 28 **AFQTP UNIT 2**

MONTHLY (28.2.9.3.)

Notice. This AFQTP is *NOT* intended to replace the applicable technical references nor is it intended to replace hands-on training. It is to be used in conjunction with these for training purposes only.

MONTHLY PERIODIC INSPECTION AND PREVENTIVE MAINTENANCE

Task Training Guide

STS Reference Number/Title:	28.2.9.3., Monthly periodic inspection and preventive maintenance.
Training References:	1. 35E8 series Technical Orders (TOs): 1.1. TO 35E8-2-1-101, USAF Aircraft Arresting Systems. 1.2. TO 35E8-2-10 Series/Work-cards, MAAS Operation and Service. 1.3. TO 35E8-2-2 Series/Work-cards, MA-1A Operation and Service. 1.4. TO 35E82-5 Series/Work-cards, BAK-12 Operation and Service. 2. TO 38G2-89 Series, Wisconsin Engines. 3. Career Development Course (CDC) 3E052B Volume 3, Unit 6: *Mobile Aircraft Arresting System.* 4. AFI 32-1043, *Management of Aircraft Arresting Systems*. 5. CD-ROM Air Force Qualification Training Package (AFQTP) 3E0X2 Electrical Power Production, Version 1.0, Nov 97: *Mobile Aircraft Arresting System (MAAS).* 6. Local Procedures.
Prerequisites:	1. **Possess as a minimum a 3E032 AFSC.** 2. **Review the following references:** 2.1. Review CDC 3E052B Volume 3, Unit 6. 2.2. 35E8 series TOs. 2.3. 38G2-89 series TOs. 3. **Complete** CD-ROM AFQTP Electrical Power Production, Version 1.0, Nov 97: *Mobile Aircraft Arresting System (MAAS).*
Required:	1. Computer to support AFQTP CD-ROMs. 2. Applicable technical references. 3. MAAS. 4. Personal safety equipment. 5. General tool kit.
Learning Objective:	Monthly periodic inspection and preventive maintenance.
	Trainee will be able to perform monthly periodic inspection and preventive maintenance for the MAAS.
Notes:	
1. To successfully complete this element follow the steps outlined in the applicable technical manual exactly--no exceptions. 2. Any safety violation is an automatic failure.	

Notice. This AFQTP is *NOT* intended to replace the applicable technical references nor is it intended to replace hands-on training. It is to be used in conjunction with these for training purposes only.

MONTHLY PERIODIC INSPECTION AND PREVENTIVE MAINTENANCE

1. Background. In order to maintain the arresting systems in peak operating condition, these required inspections must be performed monthly. Inspections must be completed before the beginning of scheduled flying operations.

2. Complete the CD-ROM AFQTP 3E0X2 Electrical Power Production, Version 1.0, Nov 97: Mobile Aircraft Arresting System (MAAS) for detailed instructions on monthly inspections. ***After completing the CD-ROM AFQTP see your Unit Education and Training Manager to take the mandatory CerTest # 8016, MAAS QTP, Lesson 7. Trainee must score at least 80% to meet the minimum completion requirements for diamond tasks.***

> **NOTE:**
> The review questions for this material are in the above-mentioned CD-ROM.

3. If the equipment is available, then perform the following steps:

Step 1: PRIOR TO LEAVING SHOP.

1.1. Review the Barrier Maintenance Schedule calendar, status board, and Barrier Maintenance log book. Personnel should review the barrier logbook for any items that pertain to the aircraft arresting system. Personnel should review the barrier maintenance status board for any maintenance due for that day.

1.2. Update the Logbook. The barrier maintenance log book should be updated prior of leaving the shop by entering the day, date, time, weather conditions, active runway, personnel on duty, any comments or information on the aircraft arresting system from the Fire dept. log book, and enter any maintenance actions planned to be accomplished for that day.

1.3. Ensure appropriate supplies, equipment, tools, and technical orders are on hand. Ensure that all materials, equipment and work cards, checklist, or TOs are available to accomplish the work planned for that day.

1.4. Inspect Barrier Maintenance vehicle. Inspect the barrier maintenance vehicle in accordance with the checklist on the AF Form 1800, prior to starting vehicle. Sign off the 1800 next to the date the vehicle was inspected.

1.4.1. Perform Radio checks on all radios with Fire Dept., Base Ops, and Tower.

1.4.2. Ensure vehicle's emergency lights are operational.

1.4.3. Ensure each person uses ear protection before starting engines.

Step 2: RUNWAY INSPECTION. It is recommended that this inspection be performed first, as flying may start before its scheduled time.

2.1. Check/paint runway donut spacing markers.

2.2. Effective pendent height. Keep a record of effective pendant height according to Attachment 6 of AFI 32-1043 for each system installed.

2.3. Lubricate cable.

2.4. Lubricate all runway edge/turnaround sheaves.

Notice. This AFQTP is *NOT* intended to replace the applicable technical references nor is it intended to replace hands-on training. It is to be used in conjunction with these for training purposes only.

2.5. Clean, inspect and/or adjust tape brush. Inspect and adjust all tape brush, if the tape brushes have become worn to the extent that they no longer perform efficiently they must be replaced.

2.6. Inspect tape guides for wear.

2.7. Clean and vacuum the unit and deck sheaves.

Step 3: BARRIER SYSTEM INSPECTION. The barrier system inspection pertains to aircraft arresting system inspections.

3.1. Check allen screws in all sprockets for tightness.

3.2. Check fluid level in both gear reducers.

3.3. Check fluid level in fluid coupling.

3.4. Inspect tape guides for wear.

3.5. Inspect clearance of tape edge with side plates and phenolic pads for wear. The tape storage reel on the absorber assembly is to be inspected monthly, or after five arrestments, which ever occurs first, for proper clearance between the edge of the tape stack and inside face of the reel side plates (1/8 inch combined clearance maximum). Care must also be taken to insure that the phenolic pads on the tape reel support rings press lightly against the outside face of the reel side plates.

3.6. Inspect tape stack height and compare to shop status board.

3.7. Inspect brakes for wear and compare readings with shop status board. To determine brake wear on the Bliss brake, measure the distance from the back pressure plate to the edge of the brake carrier. Brake wear measurements must be taken with static pressure applied to the brake.

3.7.1. On new brakes this measurement must be 1/4 to 5/16 inch.

3.7.2. When normal wear has increased dimension "C" to 11/16, a brake replacement should be scheduled when convenient.

3.7.3. When normal wear has increased dimension "C" to 3/4", a brake replacement is mandatory.

3.8. Lubricate the following:

3.8.1. Phenolic pads - (grease). Phenolic pads must be kept lubricated at all times to eliminate friction and insure proper reel movement.

3.8.2. Drive chains - (10 wt.).

3.8.3. All regular sprockets - (grease).

3.8.4. Control linkage - (10 wt.).

3.8.5. Carrier assembly - (grease). On the retract clutch carrier assembly you will find a zert fitting, apply two or three pumps of the grease. To apply a small amount of grease into the assembly.

3.8.6. Gearbox drive chain tensioner - (10 wt.).

3.8.7. Swivel joint on rewind clutch.

3.8.8. Rewind tensioner - (grease).

3.8.9. Clutch rotary hydraulic joint - (10 wt.).

3.8.10. PTO throwout bearing.

Notice. This AFQTP is *NOT* intended to replace the applicable technical references nor is it intended to replace hands-on training. It is to be used in conjunction with these for training purposes only.

3.9. Functional Check. A monthly functional test of the arresting system consists of pulling the tape out that is inside the MAAS and fairlead beam with a truck, operating the rewind system and conducting a complete inspection of the system.

3.9.1. Inspect all tape sheaves for freedom of rotation

3.9.2. Check exposed tape for damage.

3.9.3. Inspect system for corrosion. The system should be inspected monthly to detect any signs of corrosion. When corrosion of the BAK-12 structure is in evidence, maintenance barrier crews will treat barrier metal parts, as necessary using TO 1-1-2 and TO 1-1-8 for reference.

3.9.3.1. Aluminum parts should have the corrosion removed utilizing aluminum wool or aluminum abrasive paper followed by a conversion chromate coating. Military Specification MIL-C-5541. If surface permits organic finish, apply one coat wash primer, Military Speciation MIL-C 8514, two coats of primer, Military Speciation MIL-P-15930 and two coats of top paint, Military Specification MIL-P15934.

3.9.3.2. For ferrous materials initiate effective corrosion removal by wire brushing or sanding. Apply one coat of wash primer, Military Specification MIL-P-15930 and two coats of top coat paint, Military Specification MIL-P-15934.

3.10. Every effort should be made by operating personnel to keep the arresting engine as clean as possible. A clean unit is not only impressive, but it also increases the life of the unit. The procedure for cleaning is as follows:

3.10.1. At least once a month the operator shall wipe down the entire equipment with dry cleaning solvent, Federal Specification P-D-680, Type II, or equivalent, to remove all excess grease, rust, fluid, oil, and dirt. Apply paint as necessary.

3.10.2. Inspect reel assembly for wobble during operation.

3.10.3. Check fluid coupling for operation during rewind and pre-tensioning.

Step 4: UPDATE BARRIER MAINTENANCE LOGBOOK.

Notice. This AFQTP is *NOT* intended to replace the applicable technical references nor is it intended to replace hands-on training. It is to be used in conjunction with these for training purposes only.

MONTHLY PERIODIC INSPECTION AND PREVENTIVE MAINTENANCE

PERFORMANCE CHECKLIST

INSTRUCTIONS:

The trainee must satisfactorily perform all parts of the task without assistance. Evaluate the trainee's performance using this checklist.

DID THE TRAINEE….?	YES	NO
PRIOR TO LEAVING SHOP.		
1. Review the Barrier Maintenance Schedule calendar, status board, and Barrier Maintenance logbook		
2. Update the logbook		
3. Ensure appropriate supplies, equipment, tools, and technical orders are on hand		
4. Inspect Barrier Maintenance vehicle in accordance with the AF Form 1800 and sign off on the 1800		
5. Perform Radio checks on all radios with Fire Dept., Base Ops, and Tower		
6. Ensure vehicle's emergency lights are operational		
7. Ensure each person uses ear protection before starting engines		
RUNWAY INSPECTION.		
8. Check/paint runway donut spacing markers.		
9. Check/record pendent height		
10. Lubricate cable		
11. Lubricate all runway edge/turnaround sheaves		
12. Clean, inspect and/or adjust tape brush		
13. Inspect tape guides for wear		
14. Clean and vacuum the unit and deck sheaves		
BARRIER SYSTEM INSPECTION.		
15. Check allen screws in all sprockets for tightness		
16. Check fluid level in both gear reducers		
17. Check fluid level in fluid coupling		
18. Inspect tape guides for wear		
19. Inspect clearance of tape edge with side plates and phenolic pads for wear		
20. Inspect tape stack height and compare to shop status board		
21. Inspect brakes for wear and compare readings with shop status board		
22. Lubricate the following: 22.1. Phenolic pads – (grease). 22.2. Drive chains – (10 wt.). 22.3. All regular sprockets – (grease). 22.4. Control linkage – (10 wt.). 22.5. Carrier Assembly – (grease). 22.6. Gearbox drive chain tensioner – (10 wt.)		

Notice. This AFQTP is *NOT* intended to replace the applicable technical references nor is it intended to replace hands-on training. It is to be used in conjunction with these for training purposes only.

PERFORMANCE CHECKLIST (Continued)

DID THE TRAINEE….?	YES	NO
FUNCTIONAL CHECK.		
23. Inspect all tape sheaves for freedom of rotation		
24. Check exposed tape for damage		
25. Inspect system for corrosion		
26. Inspect reel assembly for wobble during operation		
27. Check fluid coupling for operation during rewind and pre-tensioning		
28. Annotate the AF Form 244 or Barrier board		
29. Ensure appropriate supplies, equipment, tools, and technical orders were accounted for and in their proper place before leaving the runway		
30. Update the Barrier Maintenance logbook		
31. Comply with all safety requirements		

FEEDBACK: Trainer should provide both positive and/or negative feedback to the trainee immediately after the task is performed. This will ensure the issue is still fresh in the mind of both the trainee and trainer.

Notice. This AFQTP is *NOT* intended to replace the applicable technical references nor is it intended to replace hands-on training. It is to be used in conjunction with these for training purposes only.

MOBILE AIRCRAFT ARRESTING SYSTEM (MAAS)

PERFORM MAAS PERIODIC INSPECTION AND PREVENTIVE MAINTENANCE

MODULE 28 **AFQTP UNIT 2**

QUARTERLY (28.2.9.4.)

Notice. This AFQTP is *NOT* intended to replace the applicable technical references nor is it intended to replace hands-on training. It is to be used in conjunction with these for training purposes only.

QUARTERLY PERIODIC INSPECTION AND PREVENTIVE MAINTENANCE

Task Training Guide

STS Reference Number/Title:	28.2.9.4., Quarterly periodic inspection and preventive maintenance.
Training References:	1. 35E8 series Technical Orders (TOs): 1.1. TO 35E8-2-1-101, USAF Aircraft Arresting Systems. 1.2. TO 35E8-2-10 Series/Work-cards, MAAS Operation and Service. 1.3. TO 35E8-2-2 Series/Work-cards, MA-1A Operation and Service. 1.4. TO 35E82-5 Series/Work-cards, BAK-12 Operation and Service. 2. TO 38G2-89 Series, Wisconsin Engines. 3. Career Development Course (CDC) 3E052B Volume 3, Unit 6: *Mobile Aircraft Arresting System.* 4. AFI 32-1043, *Management of Aircraft Arresting Systems*. 5. CD-ROM Air Force Qualification Training Package (AFQTP) 3E0X2 Electrical Power Production, Version 1.0, Nov 97: *Mobile Aircraft Arresting System (MAAS).* 6. Local Procedures.
Prerequisites:	1. **Possess as a minimum a 3E032 AFSC.** 2. **Review the following references:** 2.1. Review CDC 3E052B Volume 3, Unit 6. 2.2. 35E8 series TOs. 2.3. 38G2-89 series TOs. 3. **Complete** CD-ROM AFQTP Electrical Power Production, Version 1.0, Nov 97: *Mobile Aircraft Arresting System (MAAS).*
Required:	1. Computer to support AFQTP CD-ROMs. 2. Applicable technical references. 3. MAAS. 4. Personal safety equipment. 5. General tool kit.
	Quarterly periodic inspection and preventive maintenance.
Samples of Behavior:	Trainee will be able to perform quarterly periodic inspection and preventive maintenance for the MAAS.
Notes:	
1. To successfully complete this element follow the steps outlined in the applicable technical manual exactly--no exceptions. 2. Any safety violation is an automatic failure.	

Notice. This AFQTP is *NOT* intended to replace the applicable technical references nor is it intended to replace hands-on training. It is to be used in conjunction with these for training purposes only.

QUARTERLY PERIODIC INSPECTION AND PREVENTIVE MAINTENANCE

1. Background. In order to maintain the arresting systems in peak operating condition, these required inspections must be performed quarterly. Inspections must be completed before the beginning of scheduled flying operations.

2. Complete the CD-ROM AFQTP 3E0X2 Electrical Power Production, Version 1.0, Nov 97: Mobile Aircraft Arresting System (MAAS) for detailed instructions on quarterly inspections. ***After completing the CD-ROM AFQTP see your Unit Education and Training Manager to take the mandatory CerTest # 8016, MAAS QTP, Lesson 7. Trainee must score at least 80% to meet the minimum completion requirements for diamond tasks.***

> **NOTE:**
> The review questions for this material are in the above-mentioned CD-ROM.

3. If the equipment is available, then perform the following steps:

Step 1: PRIOR TO LEAVING SHOP.

1.1. Review the Barrier Maintenance Schedule calendar, status board, and Barrier Maintenance log book. Personnel should review the barrier logbook for any items that pertain to the aircraft arresting system. Personnel should review the barrier maintenance status board for any maintenance due for that day.

1.2. Update the Logbook. The barrier maintenance log book should be updated prior of leaving the shop by entering the day, date, time, weather conditions, active runway, personnel on duty, any comments or information on the aircraft arresting system from the Fire dept. log book, and enter any maintenance actions planned to be accomplished for that day.

1.3. Ensure appropriate supplies, equipment, tools, and technical orders are on hand. Ensure that all materials, equipment and work cards, checklist, or TOs are available to accomplish the work planned for that day.

1.4. Inspect Barrier Maintenance vehicle. Inspect the barrier maintenance vehicle in accordance with the checklist on the AF Form 1800, prior to starting vehicle. Sign off the 1800 next to the date the vehicle was inspected.

1.4.1. Perform Radio checks on all radios with Fire Dept., Base Ops, and Tower.

1.4.2. Ensure vehicle's emergency lights are operational.

1.4.3. Ensure each person uses ear protection before starting engines.

Step 2: RUNWAY INSPECTION. It is recommended that this inspection be performed first, as flying may start before its scheduled time.

2.1. Pullout marks.

2.2. Moon marks.

2.3. Inspect overrun for condition, weeds, and cleanliness.

Step 3: BARRIER SYSTEM INSPECTION. The barrier system inspection pertains to aircraft arresting system inspections.

Notice. This AFQTP is *NOT* intended to replace the applicable technical references nor is it intended to replace hands-on training. It is to be used in conjunction with these for training purposes only.

3.1. Lubricate right angle gear drive - (90 wt.).

3.2. Change engine crankcase oil.

3.3. Lubricate distributor.

3.4. Lubricate housing bearing.

3.5. Pre-synchronization.

3.5.1. Check cam and cam sprocket for correct installation.

3.5.2. Synchronization of both arresting engines should be accomplished within two (2) hours. If temperature changes +/- 5 degrees F, resynchronization of both arresting engines is requested.

3.5.3. Warm up engines prior to installing drive chains.

3.5.4. Check cam control clearance (0.006 +\-0.001 inches).

3.6. Synchronization.

3.6.1. Verify pump drive chain gas been removed.

3.6.2. Install synchronizing chain from right-angle reducer to pump sprocket.

3.6.3. Check fluid level in synchronizing idler with all-purpose grease.

3.6.4. Loosen valve stem lock nuts.

3.6.5. Position 270 degrees station on cam on horizontal centerline to cam roller center.

3.6.6. Check that cam is positioned axially on reducer shaft to align with cam yoke roller.

3.6.7. Check for spot drill in reducer shaft.

3.6.8. Tighten cam set screws.

3.6.9. Rotate shuttle valve handle to the full right ("OFF") position.

3.6.10. Rotate the cam to 60 degrees ("SYNC") position and measure and record the valve lift at the stem.

3.6.11. Turn knob of needle valve to 5.0 position.

3.6.12. Engage manual over center clutch, and set throttle for a constant 780 rpm pump speed.

3.6.13. Adjust needle valve knob to obtain 1,100 psi on pressure gage.

3.7. Proof Test.

3.7.1. Leave cam set at the 60-degree mark. Verify engine speed by using the hand-held tachometer on the engine shaft at the flywheel.

3.7.2. With the engine operating at 1600 +\- 100 rpm, rapidly close the cam control valve by either rotating the cam drive sprocket or forcing the cam follower away from the cam with a suitable lever until the valve is seated in the "closed" position. Relief valve pressure should be adjusted to approximately 2700 psi for 1200 feet runout, or 2000 psi for 950 feet runout.

3.7.3. These steps should be repeated a minimum of three (3) times or as often as required to check visually that no leaks are present.

3.7.4. Return the rewind system to operational configuration.

3.8. Functional Check.

3.8.1. Pull tape out to 900 feet.

3.8.2. Inspect all tape sheaves for freedom of rotation.

Notice. This AFQTP is *NOT* intended to replace the applicable technical references nor is it intended to replace hands-on training. It is to be used in conjunction with these for training purposes only.

3.8.3. Check exposed tape for damage.

3.8.4. Inspect system for corrosion.

3.8.5. Inspect reel assembly for wobble during operation.

3.8.6. Check fluid coupling for operation during rewind and pre-tensioning.

Step 4: UPDATE BARRIER MAINTENANCE LOGBOOK.

Notice. This AFQTP is *NOT* intended to replace the applicable technical references nor is it intended to replace hands-on training. It is to be used in conjunction with these for training purposes only.

QUARTERLY PERIODIC INSPECTION AND PREVENTIVE MAINTENANCE

PERFORMANCE CHECKLIST

INSTRUCTIONS:

The trainee must satisfactorily perform all parts of the task without assistance. Evaluate the trainee's performance using this checklist.

DID THE TRAINEE….?	YES	NO
PRIOR TO LEAVING SHOP.		
1. Review the Barrier Maintenance Schedule calendar, status board, and Barrier Maintenance logbook		
2. Update the logbook		
3. Ensure appropriate supplies, equipment, tools, and technical orders are on hand		
4. Inspect Barrier Maintenance vehicle in accordance with the AF Form 1800 and sign off on the 1800		
5. Perform Radio checks on all radios with Fire Dept., Base Ops, and Tower		
6. Ensure vehicle's emergency lights are operational		
7. Ensure each person uses ear protection before starting engines		
RUNWAY INSPECTION.		
8. Inspect the pullout marks		
9. Inspect moon marks		
10. Inspect overrun for condition, weeds, and cleanliness		
BARRIER SYSTEM INSPECTION.		
11. Lubricate right angle gear drive - (90 wt.)		
12. Change engine crankcase oil		
13. Lubricate distributor		
14. Lubricate housing bearing		
15. Perform pre-Synchronization		
16. Perform synchronization		
17. Perform proof test		
FUNCTIONAL CHECK.		
18. Pull tape out to 900 feet		
19. Inspect all tape sheaves for freedom of rotation		
20. Check exposed tape for damage		
21. Inspect system for corrosion		
22. Inspect reel assembly for wobble during operation		
23. Check fluid coupling for operation during rewind and pre-tensioning		
24. Annotate the AF Form 244 or Barrier board		
25. Ensure appropriate supplies, equipment, tools, and technical orders were accounted for and in their proper place before leaving the runway		
26. Update the Barrier Maintenance logbook		
27. Comply with all safety requirements		

FEEDBACK: Trainer should provide both positive and/or negative feedback to the trainee immediately after the task is performed. This will ensure the issue is still fresh in the mind of both the trainee and trainer.

Notice. This AFQTP is *NOT* intended to replace the applicable technical references nor is it intended to replace hands-on training. It is to be used in conjunction with these for training purposes only.

MOBILE AIRCRAFT ARRESTING SYSTEM (MAAS)

PERFORM MAAS PERIODIC INSPECTION AND PREVENTIVE MAINTENANCE

MODULE 28 **AFQTP UNIT 2**

SEMI-ANNUAL (28.2.9.5.)

Notice. This AFQTP is *NOT* intended to replace the applicable technical references nor is it intended to replace hands-on training. It is to be used in conjunction with these for training purposes only.

SEMI-ANNUAL PERIODIC INSPECTION AND PREVENTIVE MAINTENANCE

Task Training Guide

STS Reference Number/Title:	28.2.9.5., Semi-annual periodic inspection and preventive maintenance.
Training References:	1. 35E8 series Technical Orders (TOs): 1.1. TO 35E8-2-1-101, USAF Aircraft Arresting Systems. 1.2. TO 35E8-2-10 Series/Work-cards, MAAS Operation and Service. 1.3. TO 35E8-2-2 Series/Work-cards, MA-1A Operation and Service. 1.4. TO 35E82-5 Series/Work-cards, BAK-12 Operation and Service. 2. TO 38G2-89 Series, Wisconsin Engines. 3. Career Development Course (CDC) 3E052B Volume 3, Unit 6: *Mobile Aircraft Arresting System.* 4. AFI 32-1043, *Management of Aircraft Arresting Systems*. 5. CD-ROM Air Force Qualification Training Package (AFQTP) 3E0X2 Electrical Power Production, Version 1.0, Nov 97: *Mobile Aircraft Arresting System (MAAS).* 6. Local Procedures.
Prerequisites:	1. **Possess as a minimum a 3E032 AFSC.** 2. **Review the following references:** 2.1. Review CDC 3E052B Volume 3, Unit 6. 2.2. 35E8 series TOs. 2.3. 38G2-89 series TOs. 3. **Complete** CD-ROM AFQTP Electrical Power Production, Version 1.0, Nov 97: *Mobile Aircraft Arresting System (MAAS).*
Required:	1. Computer to support AFQTP CD-ROMs. 2. Applicable technical references. 3. MAAS. 4. Personal safety equipment. 5. General tool kit.
	Semi-annual periodic inspection and preventive maintenance.
Samples of Behavior:	Trainee will be able to perform semi-annual periodic inspection and preventive maintenance for the MAAS.
Notes:	
1. To successfully complete this element follow the steps outlined in the applicable technical manual exactly--no exceptions. 2. Any safety violation is an automatic failure.	

Notice. This AFQTP is *NOT* intended to replace the applicable technical references nor is it intended to replace hands-on training. It is to be used in conjunction with these for training purposes only.

SEMI-ANNUAL PERIODIC INSPECTION AND PREVENTIVE MAINTENANCE

1. Background. In order to maintain the arresting systems in peak operating condition, these required inspections must be performed semi-annual. Inspections must be completed before the beginning of scheduled flying operations.

2. Complete the CD-ROM AFQTP 3E0X2 Electrical Power Production, Version 1.0, Nov 97: Mobile Aircraft Arresting System (MAAS) for detailed instructions on semi-annual inspections. ***After completing the CD-ROM AFQTP see your Unit Education and Training Manager to take the mandatory CerTest # 8016, MAAS QTP, Lesson 7. Trainee must score at least 80% to meet the minimum completion requirements for diamond tasks.***

> **NOTE:**
> The review questions for this material are in the above-mentioned CD-ROM.

3. If the equipment is available, then perform the following steps:

Step 1: PRIOR TO LEAVING SHOP.

1.1. Review the Barrier Maintenance Schedule calendar, status board, and Barrier Maintenance log book. Personnel should review the barrier logbook for any items that pertain to the aircraft arresting system. Personnel should review the barrier maintenance status board for any maintenance due for that day.

1.2. Update the Logbook. The barrier maintenance log book should be updated prior of leaving the shop by entering the day, date, time, weather conditions, active runway, personnel on duty, any comments or information on the aircraft arresting system from the Fire dept. log book, and enter any maintenance actions planned to be accomplished for that day.

1.3. Ensure appropriate supplies, equipment, tools, and technical orders are on hand. Ensure that all materials, equipment and work cards, checklist, or TOs are available to accomplish the work planned for that day.

1.4. Inspect Barrier Maintenance vehicle. Inspect the barrier maintenance vehicle in accordance with the checklist on the AF Form 1800, prior to starting vehicle. Sign off the 1800 next to the date the vehicle was inspected.

1.4.1. Perform Radio checks on all radios with Fire Dept., Base Ops, and Tower.

1.4.2. Ensure vehicle's emergency lights are operational.

1.4.3. Ensure each person uses ear protection before starting engines.

Step 2: RUNWAY INSPECTION. It is recommended that this inspection be performed first, as flying may start before its scheduled time.

2.1. Crop Tapes.

2.1.1. You will need to cut off the tape that has been exposed to the sunlight.

2.1.2. The following are the procedures for assembly of tape connector:

Notice. This AFQTP is *NOT* intended to replace the applicable technical references nor is it intended to replace hands-on training. It is to be used in conjunction with these for training purposes only.

2.1.2.1. Using the tape clamp as a template, the 8-1/2 inch edge of the clamp farthest from the bolt holes (flat side of the clamp) must be aligned with the bitter end of the tape. Do not allow the edge of the tape to extend beyond the edge of the clamp. (In dual mode configuration, the flat portion of the clamps must install in a fashion where both clamps are on the inside of the tapes.)

2.1.2.2. Mark the tape by using the spray can at five bolt hole locations.

2.1.2.3. Punch five holes in the tape at the marked locations, using the 7/16-inch diameter tape punch. (Always use a protective material under the clamps when working with the clamps, such as punching holes.)

2.1.2.4. Assemble the tape by inserting the screws through the top clamp and attaching screwing into the clamp. Wrench ratchet to tighten them security.

2.1.2.5. Once tighten, use the 5-pound mallet to seating the clamp. Then tighten the clamp again to ensure security of the clamp.

2.1.2.6. You crease the tape by turning the tape around the clamp and using the rubber mallet to create a crease on the tape.

2.1.2.7. Insert the tape and clamps into the tape connector body through long side of the tape connecter. Ensuring that the half moon of the clamps (top clamp) goes in the same direction as the half-moon of the anvil.

2.1.2.8. Wrap the tape back through the body, with the clamp nearest the anvil of the body and the tape between the clamp and the bottom clamp.

2.1.2.9. Align the hole on the side of the clamp with the openings of the body.

2.1.2.10. Insert the two end bolts into the sides of the tape connector body and clamp assembly.

2.1.2.11. Do a visual check to insure that the tape and tape connector have been properly assembled.

1.1.2.11.1. Tape and pendant pin must be on the same side of the anvil.

1.1.2.11.2. Unwrap the tape 90 degrees and the better end of the tape clamp should be exposed.

CAUTION:

CARE MUST BE TAKEN TO INSURE THAT NO SLACK LOOPS ARE ENTRAPPED IN THE TAPE AS IT IS REEVED THROUGH THE CONNECTOR BODY.

2.2. Check tape stack height. You must ensure that the minimum tape stack height has not been meet.

Step 3: BARRIER SYSTEM INSPECTION. The barrier system inspection pertains to aircraft arresting system inspections.

3.1. Change the oil in cam gear reducer - (90 wt.).

3.2. Change the oil in rewind gear reducer - (90 wt.).

3.3. Change the oil in fluid coupling - (10 wt.).

3.4. Clean rewind engine air filter.

3.5. Clean fuel bowl and strainer.

Step 4: UPDATE BARRIER MAINTENANCE LOGBOOK.

Notice. This AFQTP is *NOT* intended to replace the applicable technical references nor is it intended to replace hands-on training. It is to be used in conjunction with these for training purposes only.

SEMI-ANNUAL PERIODIC INSPECTION AND PREVENTIVE MAINTENANCE

PERFORMANCE CHECKLIST

INSTRUCTIONS:

The trainee must satisfactorily perform all parts of the task without assistance. Evaluate the trainee's performance using this checklist.

DID THE TRAINEE….?	YES	NO
PRIOR TO LEAVING SHOP.		
1. Review the Barrier Maintenance Schedule calendar, status board, and Barrier Maintenance logbook		
2. Update the logbook		
3. Ensure appropriate supplies, equipment, tools, and technical orders are on hand		
4. Inspect Barrier Maintenance vehicle in accordance with the AF Form 1800 and sign off on the 1800		
5. Perform Radio checks on all radios with Fire Dept., Base Ops, and Tower		
6. Ensure vehicle's emergency lights are operational		
7. Ensure each person uses ear protection before starting engines		
RUNWAY INSPECTION.		
8. Crop tape		
BARRIER SYSTEM INSPECTION.		
9. Change the oil in cam gear reducer - (90 wt.)		
10. Change the oil in rewind gear reducer - (90 wt.)		
11. Change the oil in fluid coupling - (10 wt.)		
12. Clean rewind engine air filter		
13. Clean fuel bowl and strainer		
14. Annotate the AF Form 244 or Barrier board		
15. Ensure appropriate supplies, equipment, tools, and technical orders were accounted for and in their proper place before leaving the runway		
16. Update the Barrier Maintenance logbook		
17. Comply with all safety requirements		

FEEDBACK: Trainer should provide both positive and/or negative feedback to the trainee immediately after the task is performed. This will ensure the issue is still fresh in the mind of both the trainee and trainer.

Notice. This AFQTP is *NOT* intended to replace the applicable technical references nor is it intended to replace hands-on training. It is to be used in conjunction with these for training purposes only.

MOBILE AIRCRAFT ARRESTING SYSTEM (MAAS)

PERFORM MAAS PERIODIC INSPECTION AND PREVENTIVE MAINTENANCE

MODULE 28 **AFQTP UNIT 2**

AFTER-ARRESTMENT (28.2.9.6.)

Notice. This AFQTP is *NOT* intended to replace the applicable technical references nor is it intended to replace hands-on training. It is to be used in conjunction with these for training purposes only.

AFTER-ARRESTMENT INSPECTION AND MAINTENANCE

Task Training Guide

STS Reference Number/Title:	28.2.9.6., After-arrestment inspection and maintenance.
Training References:	1. 35E8 series Technical Orders (TOs): 1.1. TO 35E8-2-1-101, USAF Aircraft Arresting Systems. 1.2. TO 35E8-2-10 Series/Work-cards, MAAS Operation and Service. 1.3. TO 35E8-2-2 Series/Work-cards, MA-1A Operation and Service. 1.4. TO 35E82-5 Series/Work-cards, BAK-12 Operation and Service. 2. TO 38G2-89 Series, Wisconsin Engines. 3. Career Development Course (CDC) 3E052B Volume 3, Unit 6: *Mobile Aircraft Arresting System.* 4. AFI 32-1043, *Management of Aircraft Arresting Systems*. 5. CD-ROM Air Force Qualification Training Package (AFQTP) 3E0X2 Electrical Power Production, Version 1.0, Nov 97: *Mobile Aircraft Arresting System (MAAS).* 6. Local Procedures.
Prerequisites:	1. **Possess as a minimum a 3E032 AFSC.** 2. **Review the following references:** 2.1. Review CDC 3E052B Volume 3, Unit 6. 2.2. 35E8 series TOs. 2.3. 38G2-89 series TOs. 3. **Complete** CD-ROM AFQTP Electrical Power Production, Version 1.0, Nov 97: *Mobile Aircraft Arresting System (MAAS).*
Required:	1. Computer to support AFQTP CD-ROMs. 2. Applicable technical references. 3. MAAS. 4. Personal safety equipment. 5. General tool kit.
	After-arrestment inspection and maintenance.
Samples of Behavior:	Trainee will be able to perform after-arrestment inspection and maintenance for the MAAS.
Notes:	
3. To successfully complete this element follow the steps outlined in the applicable technical manual exactly--no exceptions. 4. Any safety violation is an automatic failure.	

Notice. This AFQTP is *NOT* intended to replace the applicable technical references nor is it intended to replace hands-on training. It is to be used in conjunction with these for training purposes only.

AFTER-ARRESTMENT INSPECTION AND MAINTENANCE

1. Background. In order to maintain the arresting systems in peak operating condition, these required inspections must be performed after each arrestment to ensure the system is operational.

2. Complete the CD-ROM AFQTP 3E0X2 Electrical Power Production, Version 1.0, Nov 97: Mobile Aircraft Arresting System (MAAS) for detailed instructions on after-arrestment inspections. ***After completing the CD-ROM AFQTP see your Unit Education and Training Manager to take the mandatory CerTest # 8016, MAAS QTP, Lesson 7. Trainee must score at least 80% to meet the minimum completion requirements for diamond tasks.***

> **NOTE:**
> The review questions for this material are in the above-mentioned CD-ROM.

3. If the equipment is available, then perform the following steps:

Step 1: PERFORM A PRE-REWIND UNIT INSPECTION.

1.1. Obtain and check the following before engine start-up.

1.1.1. RPM.

1.1.2. Brake Pressure.

1.1.3. Fuel Level.

1.1.4. Oil Level.

1.2. Start engines and leave at idle.

1.3. Perform equipment survey.

1.3.1. System for worn parts.

1.3.2. Fittings and lines for leaks.

1.3.3. Drive chains.

1.3.4. System for corrosion.

Step 2: PERFORM A PRE-REWIND RUNWAY SURVEY.

2.1. Determine if the engagement was on-center or off-center engagement.

2.2. Check tape for localize wear.

2.3. Deck sheave and tape sweep area for debris.

2.4. Rollers for freedom of movement

2.5. Report to Command the following:

2.5.1. Status of engines.

2.5.2. Status of tapes

Step 3: PERFORM INSPECTION DURING REWIND.

3.1. Barrier personnel take proper positions and inspect during rewind.

3.2. Tapes sheaves for freedom of rotation.

3.3. Reel shaft for wobble during retraction.

Notice. This AFQTP is *NOT* intended to replace the applicable technical references nor is it intended to replace hands-on training. It is to be used in conjunction with these for training purposes only.

Step 4: PERFORM AN AFTER PRETENSION INSPECTION. Unit Inspection:

4.1. Fluid level in accumulator.
4.2. Accumulator pressure.
4.3. Fluid level in reservoir.
4.4. Cam index.
4.5. Valve control linkage.
4.6. Zero tachometer and pressure gauge.

Step 5: RUNWAY INSPECTION.

5.1. Assist in spacing/resetting cable.
5.2. Pendant for tension.
5.3. Pendant for wear, broken wires and wear.
5.4. Pendant supports for condition and spacing.
5.5. Tape for localize wear.
5.6. Tape connectors for wear or damage.
5.7. Report barrier status to your Major Command.
5.8. Obtain from Fire Chief:
5.8.1. Aircraft Speed.
5.8.2. Determine aircraft speed.
5.8.3. Determine Regime.
5.9. Obtain the following:
5.9.1. Runout.
5.9.2. Off-Center.
5.9.3. Aircraft damage.
5.10. Fill Engagement report.
5.11. Update logbook.

NOTE:
Any engagement over 180 knots, replace cable and determine if tape change is required.

Notice. This AFQTP is *NOT* intended to replace the applicable technical references nor is it intended to replace hands-on training. It is to be used in conjunction with these for training purposes only.

AFTER-ARRESTMENT INSPECTION AND MAINTENANCE

PERFORMANCE CHECKLIST

INSTRUCTIONS:

The trainee must satisfactorily perform all parts of the task without assistance. Evaluate the trainee's performance using this checklist.

DID THE TRAINEE….?	YES	NO
PERFORM A PRE-REWIND UNIT INSPECTION.		
1. Obtain and check the following before engine start-up: 1.1. RPM. 1.2. Brake Pressure. 1.3. Fuel Level. 1.4. Oil Level.		
2. Start engines and leave at idle		
3. Perform equipment survey		
4. Check system for worn parts		
5. Check fittings and lines for leaks		
6. Check drive chains		
7. Check system for corrosion		
PERFORM A PRE-REWIND RUNWAY SURVEY.		
8. Determine if the engagement was on-center or off-center engagement		
9. Check tape for localize wear		
10. Check deck sheave and tape sweep area for debris		
11. Check the rollers for freedom of movement		
12. Report to Major Command the following: 12.1. Status of engines 12.2. Status of tapes		
PERFORM INSPECTION DURING REWIND.		
13. Ensure barrier personnel took their proper positions to inspect the rewind operation		
14. Check tape sheaves for freedom of rotation		
15. Check reel shaft for wobble during retraction		
PERFORM AN AFTER PRETENSION INSPECTION		
16. Check fluid level in the accumulator		
17. Check accumulator pressure		
18. Check fluid level in the reservoir		
19. Check cam index		
20. Check control valve linkage		
21. Zero tachometer and pressure gauge		
RUNWAY INSPECTION		
22. Assist in spacing/resetting cable		
23. Check pendant for tension		
24. Check pendant for wear, broken wires and wear		
25. Check tape for localize wear		
26. Check tape connectors for wear or damage		

Notice. This AFQTP is *NOT* intended to replace the applicable technical references nor is it intended to replace hands-on training. It is to be used in conjunction with these for training purposes only.

PERFORMANCE CHECKLIST (Continued)

DID THE TRAINEE….?	YES	
27. Report barrier status to Major Command		
28. Obtain information from the Fire Chief (aircraft speed, determine aircraft speed)		
29. Obtain information about MAAS (runout, off-center, aircraft damage)		
30. Fill out engagement report		
31. Update the Barrier Maintenance logbook		
32. Comply with all safety requirements		

FEEDBACK: Trainer should provide both positive and/or negative feedback to the trainee immediately after the task is performed. This will ensure the issue is still fresh in the mind of both the trainee and trainer.

Notice. This AFQTP is *NOT* intended to replace the applicable technical references nor is it intended to replace hands-on training. It is to be used in conjunction with these for training purposes only.

MOBILE AIRCRAFT ARRESTING SYSTEM (MAAS)

TROUBLESHOOT MAAS

MODULE 28 **AFQTP UNIT 2**

BRAKE ASSEMBLY (28.2.10.1.)
REWIND ASSEMBLY (28.2.10.2.)
HYDRAULIC SYSTEM (28.2.10.3.)
TRAILER HYDRAULIC SYSTEM (28.2.10.4.)

Notice. This AFQTP is *NOT* intended to replace the applicable technical references nor is it intended to replace hands-on training. It is to be used in conjunction with these for training purposes only.

TROUBLESHOOT MAAS BRAKE AND REWIND ASSEMBLY / HYDRAULIC AND TRAILER HYDRAULIC SYSTEM

Task Training Guide

STS Reference Number/Title:	28.2.10.1., Brake assembly. 28.2.10.2., Rewind assembly. 28.2.10.3., Hydraulic system. 28.2.10.4., Trailer hydraulic system.
Training References:	1. 35E8 series Technical Orders (TOs): 1.1. TO 35E8-2-1-101, USAF Aircraft Arresting Systems. 1.2. TO 35E8-2-10 Series/Work-cards, MAAS Operation and Service. 1.3. TO 35E8-2-2 Series/Work-cards, MA-1A Operation and Service. 1.4. TO 35E82-5 Series/Work-cards, BAK-12 Operation and Service. 2. TO 38G2-89 Series, Wisconsin Engines. 3. Career Development Course (CDC) 3E052B Volume 3, Unit 6: *Mobile Aircraft Arresting System.* 4. AFI 32-1043, *Management of Aircraft Arresting Systems*. 5. CD-ROM Air Force Qualification Training Package (AFQTP) 3E0X2 Electrical Power Production, Version 1.0, Nov 97: *Mobile Aircraft Arresting System (MAAS).* 6. Local Procedures.
	1. **Possess as a minimum a 3E032 AFSC.** 2. **Review the following references:** 2.1. Review CDC 3E052B Volume 3, Unit 6. 2.2. 35E8 series TOs. 2.3. 38G2-89 series TOs. 3. **Complete** CD-ROM AFQTP Electrical Power Production, Version 1.0, Nov 97: *Mobile Aircraft Arresting System (MAAS).*
Required:	1. Computer to support AFQTP CD-ROMs. 2. Applicable technical references. 3. MAAS. 4. Personal safety equipment. 5. General tool kit.
	Troubleshoot MAAS brake and rewind assembly and hydraulic/ trailer hydraulic system.
Samples of Behavior:	Trainee will be able to troubleshoot MAAS.
Notes:	
1. To successfully complete this element follow the steps outlined in the applicable technical manual exactly--no exceptions. 2. Any safety violation is an automatic failure.	

Notice. This AFQTP is *NOT* intended to replace the applicable technical references nor is it intended to replace hands-on training. It is to be used in conjunction with these for training purposes only.

TROUBLESHOOT MAAS BRAKE AND REWIND ASSEMBLY / HYDRAULIC AND TRAILER HYDRAULIC SYSTEM

1. Background: Since troubleshooting is a step-by-step procedure, the effectiveness depends on how much you know about the equipment and how much you think while working. The ability to troubleshoot depends on your capability to think and apply knowledge. To troubleshoot effectively, you must follow a systematic procedure. First, study the symptoms of the trouble thoroughly and ask yourself these questions:

1.1. What were the warning signs preceding the trouble?

1.2. What recent repair has been done?

1.3. Has a similar trouble occurred before?

2. Next, follow the basic troubleshooting procedures:

2.1. The first step is to **perform an operational check** to determine if an actual problem really exists. Follow step-by-step procedures in the technical manual for your particular item of equipment. Perform a visual inspection of the electrical components, check wiring harness for breaks, and check relays for loose connections, evidence of over heating, cracks, or any signs of damage.

2.2. The second step in troubleshooting is to **analyze the malfunction**. Detect the trouble by sight, sound, smell, or feel. Once you are aware of a malfunction, consult the proper technical manual for normal operation. This gives one a clearer understanding of how things should be working. One can also use the troubleshooting chart located in the proper technical manual.

2.2.1. It is in this step that one determines the type of trouble in order to determine the type of test equipment to use.

2.3. The third step is **locating the malfunction**; this is the most difficult task. In this step, one will need to stay focused on the problem and not allow frustration to set in. This can cause one to resort back to the remove and replace technique. Perform the previous steps; determine type of test equipment needed to check the performance. Understanding the operation and knowing the “how, what, when and where” is the key to locating the malfunction.

2.4. The fourth step is to **perform corrective action**, once you have located the problem; a neat and permanent repair is a necessity. If possible, use original replacement parts to make repairs.

2.5. The last step is to **perform an operational check**; this is the most rewarding step in the troubleshooting process. If you do not prove your work, you will not know if the problem is solved. Remember, one malfunction can produce more than one problem.

3. Complete the CD-ROM AFQTP 3E0X2 Electrical Power Production, Version 1.0, Nov 97: Mobile Aircraft Arresting System (MAAS) for detailed instruction on troubleshooting MAAS components. ***After completing the CD-ROM AFQTP see your Unit Education and Training Manager to take the mandatory CerTest # 8018, MAAS QTP, Lesson 9. Trainee must score at least 80% to meet the minimum completion requirements for diamond tasks.***

Notice. This AFQTP is *NOT* intended to replace the applicable technical references nor is it intended to replace hands-on training. It is to be used in conjunction with these for training purposes only.

NOTE:
The review questions for this material are in the above-mentioned CD-ROM.

4. If the equipment is available, then perform the following steps:

NOTE:
Trainer/Certifier must provide equipment and scenario for troubleshooting MAAS in order to complete task. Use troubleshooting charts on the next several pages for guidelines if needed.

Step 1: Trainee is provided equipment and fuel problem scenario in which to perform task.

Step 2: Use five-step process in troubleshooting:

2.1. Perform an operational check.
2.2. Analyze the malfunction.
2.3. Locate the malfunction.
2.4. Perform corrective action.
2.5. Perform an operational check.

Step 3: Record all maintenance actions in the logbook.

Notice. This AFQTP is *NOT* intended to replace the applicable technical references nor is it intended to replace hands-on training. It is to be used in conjunction with these for training purposes only.

MAAS TROUBLESHOOTING CHART	
REWIND ASSEMBLY	
THE TAPE WILL NOT RETRACT	
PROBABLE CAUSE	**SOLUTION**
Oil level in the fluid coupling.	If the oil is low, refill and check original fault. If the oil is at the proper level, continue with the checklist.
Brakes are on.	If the brakes are on, move the manual shuttle lever to the "Off" position and check original fault. If the brakes are not on, continue with the checklist.
Selector valve is faulty.	If the selector valve is faulty, replace it and check original fault. If the selector valve is good, continue with the checklist.
Clutch has not activated. (Check the clutch by observing it for movement. If it does not move, then the fluid level is low.)	If the clutch has not activated, replenish the fluid in the system through the selector valve and check original fault. If the clutch has activated, continue with the checklist.
Air in the clutch system.	Bleed the system and check the original fault. If the problem still exists, refer to the next higher level of maintenance.
THE TAPE SHEAVE(S) BINDS OR DOES NOT ROTATE FREELY	
PROBABLE CAUSE	**SOLUTION**
Check for a damaged bearing or shaft.	Repair the bearing or shaft and check the original fault. If the problem still exists, refer to the next higher level of maintenance.

Notice. This AFQTP is *NOT* intended to replace the applicable technical references nor is it intended to replace hands-on training. It is to be used in conjunction with these for training purposes only.

Continued.

MAAS TROUBLESHOOTING CHART	
HYDRAULIC SYSTEM	
EXCESSIVELY LONG RUNOUT	
PROBABLE CAUSE	**SOLUTION**
Valve cam clearance is incorrect.	Set the valve cam clearance with a feeler gage.
Air is in the hydraulic system.	Bleed the system.
Air leak in the reel driven pump suction.	Secure fittings. If leak still exists, remove tube between pump and reservoir, examine and replace if cracked, replace O-rings and reattach.
Low relief valve setting.	Check setting and reset valve if necessary. To reset valve, remove hex end cap and turn the adjusting screw. Clockwise rotation increases setting, counterclockwise decreases. 2,000 ± 100 psig is correct setting for system set for 990 ft runout and 40,000 lb aircraft weight setting.
Incorrect weight setting.	Synchronize units.
The cam is out of index.	Zero the cam.
Faulty control valve or linkage.	Inspect and repair linkage or control valve.
Brakes are worn.	Visually check brake wear.
SHORT RUNOUT OR EXCESSIVE AIRCRAFT ROLLBACK	
PROBABLE CAUSE	**SOLUTION**
Cam out of index.	Zero cam.
Incorrect weight setting.	Synchronize units.
Incorrect valve cam clearance.	Check valve cam clearance.
Incorrect tape stack height.	If there is insufficient tape, remove and replace the tape. If there is too much tape, crop the tape.
INABILITY TO OBTAIN SUFFICIENT TENSION ON THE PENDANT	
PROBABLE CAUSE	**SOLUTION**
The brakes are dragging.	Cycle manual shuttle lever two or three times and leave in “Off” position. NOTE: Even if the brakes do not seem to be dragging, it is a good idea to accomplish this step anyway.
There is excessive friction between the support ring and reel plates.	Lubricate phenolics and/or widen spacing of support ring assemblies.
The hydraulic fluid in the fluid coupling is low.	Fill with oil.

Notice. This AFQTP is *NOT* intended to replace the applicable technical references nor is it intended to replace hands-on training. It is to be used in conjunction with these for training purposes only.

Continued.

MAAS TROUBLESHOOTING CHART	
HYDRAULIC SYSTEM	
LOSS OF TAPE TENSION	
PROBABLE CAUSE	**SOLUTION**
There is a leak in the static pressure system.	Visually inspect the system for leaks and repair any that are found.
There is an internal leak in the shuttle valve.	Replace the valve.
There is a leak at the Schrader charger fitting.	Tighten or replace charger fitting as required.
TAPES EXTEND UNEVENLY DURING AN ON-CENTER ARRESTMENT	
PROBABLE CAUSE	**SOLUTION**
There is air in the hydraulic system of the long tape.	Bleed the system.
The cam is out of index.	Zero index the cam.
Engine not synchronized.	Synchronize engine.
Faulty control valve or linkage.	Inspect and repair linkage or control valve.
EXCESSIVE SAG IN THE HOOK CABLE	
PROBABLE CAUSE	**SOLUTION**
The hook cable is not properly pretension.	Start the rewind engine and pretension the hook cable.
The brakes are not holding.	Follow the steps in “Loss of Tape Tension” of this checklist.

Notice. This AFQTP is *NOT* intended to replace the applicable technical references nor is it intended to replace hands-on training. It is to be used in conjunction with these for training purposes only.

Continued.

MAAS TROUBLESHOOTING CHART	
TRAILER HYDRAULIC SYSTEM	
ERRATIC ACTION	
PROBABLE CAUSE	**SOLUTION**
Air in system.	Bleed air and check for leaks.
Viscosity of hydraulic fluid is too high.	Change to a lower viscosity fluid.
Internal leakage in the cylinder.	Replace worn packing. Check for excessive contamination or wear.
Cylinder sticking or binding.	Check for dirt, gummy deposits or leaks as above. Check for misalignment, worn parts or defective packing.
CYLINDER DOES NOT MOVE	
PROBABLE CAUSE	**SOLUTION**
Improper valve position.	Select the proper position.
Low or no fluid in HPU reservoir.	Fill with fluid and bleed the system.
Air locked in pump.	Bleed the system.
Couplers not fastened.	Fasten couplers and bleed.
Plugged hydraulic line.	Flush and clean the system.
Pump not operating.	Check HPU operating instructions and take corrective actions as required/possible.
CYLINDER MOVES ONLY PARTIALLY	
PROBABLE CAUSE	**SOLUTION**
Pump reservoir is low on fluid.	Fill and bleed.
Cylinder piston rod binding.	Check for dirt, gummy deposits or leaks as above. Check for misalignment, worn parts or defective packing.
CYLINDER MOVES SLOWER THAN NORMAL OR DOES NOT MOVE	
PROBABLE CAUSE	**SOLUTION**
Loose connection.	Tighten and bleed.
Low fluid or no fluid in the HPU reservoir.	Fill with fluid and bleed the system.
Pump (HPU) not working correctly.	Check HPU operating instructions and take corrective actions as appropriate/possible.
Leaking seals.	Replace the seals.
Loose couplers.	Tighten the couplers.
Blocked hydraulic lines.	Clean and flush.
Cylinder damaged internally.	Replace and send old cylinder to service center.

Notice. This AFQTP is *NOT* intended to replace the applicable technical references nor is it intended to replace hands-on training. It is to be used in conjunction with these for training purposes only.

Continued.

MAAS TROUBLESHOOTING CHART	
TRAILER HYDRAULIC SYSTEM	
CYLINDER MOVES BUT NOT MAINTAIN PRESSURE	
PROBABLE CAUSE	**SOLUTION**
Leaky connection.	Clean connection and use a non-hardening pipe thread compound or teflon tape if needed.
Cylinder seals leaking.	Replace seals.
Pump valve malfunctioning.	Check HPU operating instructions and take corrective actions as appropriate/possible.
CYLINDER LEAKS HYDRAULIC FLUID	
PROBABLE CAUSE	**SOLUTION**
Worn or damaged seals.	Replace seals.
Loose connection.	Tighten fittings.
TRAILER DOES NOT LOWER	
PROBABLE CAUSE	**SOLUTION**
HPU not connected.	Check connection and fasten.
Retaining pins not removed.	Remove pins.
Foreign object beneath trailer.	Raise trailer and remove blockage.
Damaged hydraulic cylinder.	See 1 through 6 of this Troubleshooting Checklist.
TRAILER DOES NOT RAISE	
PROBABLE CAUSE	**SOLUTION**
HPU not connected.	Check connection and fasten.
Hydraulic fluid leak.	Check lines and fittings and take corrective actions as required. (See previous sections of this troubleshooting checklist.)
Foreign object in axle frame path.	Remove object in axle frame path.
Low hydraulic pressure	Follow procedures in Table 5-14 (Troubleshooting Chart - HPU)
Insufficient fluid.	Check reservoir and service.

Notice. This AFQTP is *NOT* intended to replace the applicable technical references nor is it intended to replace hands-on training. It is to be used in conjunction with these for training purposes only.

TROUBLESHOOT MAAS BRAKE AND REWIND ASSEMBLY / HYDRAULIC AND TRAILER HYDRAULIC SYSTEM

PERFORMANCE CHECKLIST

INSTRUCTIONS:

The trainee must satisfactorily perform all parts of the task without assistance. Evaluate the trainee's performance using this checklist.

DID THE TRAINEE….?	YES	NO
1. Have the proper equipment and scenario to perform task		
2. Perform an operational check		
3. Analyze the malfunction		
4. Locate the malfunction		
5. Perform corrective action		
6. Perform an operational check		
7. Record all maintenance action in the logbook		
8. Comply with all safety requirements		

FEEDBACK: Trainer should provide both positive and/or negative feedback to the trainee immediately after the task is performed. This will ensure the issue is still fresh in the mind of both the trainee and trainer.

Notice. This AFQTP is *NOT* intended to replace the applicable technical references nor is it intended to replace hands-on training. It is to be used in conjunction with these for training purposes only.

EXPEDIENT BEDDOWN METHODS

HARVEST FALCON (HF) ELECTRICAL DISTRIBUTION SYSTEM

MODULE 28 **AFQTP UNIT 4**

CONNECT GENERATOR TO SECONDARY DISTRIBUTION CENTER (SDC) (28.4.2.3.2.)

Notice. This AFQTP is *NOT* intended to replace the applicable technical references nor is it intended to replace hands-on training. It is to be used in conjunction with these for training purposes only.

CONNECT GENERATOR TO SDC

Task Training Guide

STS Reference Number/Title:	28.4.2.3.2., Connect generator to SDC.
Training References:	1. Technical Orders (TO) 35CA2-2-10-1, *Secondary Distribution System, Operation, Maintenance, and Overhaul Instructions.* 2. Career Development Course (CDC) 3E052A Volume 1, Unit 6-1, Section 061, *Bare Base Electrical Distribution System Equipment.* 3. CD-ROM Air Force Qualification Training Package (AFQTP) 3E0X1 Electrical Systems, Version 1.0, Aug 97: *Harvest Falcon Electrical Distribution System.*
Prerequisites:	1. **Possess as a minimum a 3E032 AFSC.** 2. **Review the following references:** 2.1. Review CDC 3E052A Volume 1, Unit 6-1, Section 061. 2.2. TO 35CA2-2-10-1. 2.3. CD-ROM AFQTP Electrical Systems, Version 1.0, Aug 97: *Harvest Falcon Electrical Distribution System, Lesson 6 & 7 (SDC).*
Equipment/Tools Required:	1. Computer to support AFQTP CD-ROMs. 2. Applicable technical references. 3. Generator. 4. SDC. 5. Personal safety equipment. 6. General tool kit.
Learning Objective:	Connect generator to SDC.
	Trainee will be able to connect generator to SDC.
Notes:	
1. To successfully complete this element follow the steps outlined in the applicable technical manual exactly--no exceptions. 2. Any safety violation is an automatic failure.	

Notice. This AFQTP is *NOT* intended to replace the applicable technical references nor is it intended to replace hands-on training. It is to be used in conjunction with these for training purposes only.

CONNECT GENERATOR TO SDC

1. Background: In the Harvest Falcon bare base electrical system, the SDC functions as a large step-down transformer. It is designed to accept 4,160 volts, three-phase, 60 hertz primary power from either a generator or commercial power source and steps that voltage down to 120/208 volts for subsequent secondary distribution.

1.1. In the event of loss of primary power, the SDC can also accept 120/208 volts, 60 hertz, 3-phase, 4-wire power from a MEP generator through the Mission Essential receptacle and distribute it to various facilities. The SDC is also capable of accepting power directly by a loop feed from another SDC.

1.2. Proper operation of the SDC is not achievable without a thorough understanding of the purpose and function of the major controls and indicators of the SDC. Below is descriptive and operational information about these components.

1.2.1. EFD Switches. The three EFD switches, located at the top of the primary mounting panel, control the application of 4,160 VAC primary power to the transformer's primary windings. Each switch contains three poles, the center ones, containing a 30 Amp fuse may be pulled out with a hot stick to discontinue power to the transformer. The EFD switches may be accessed by unlocking and opening the high voltage compartment doors.

1.2.2. Main Circuit Breaker. The main circuit breaker, the left hand breaker located under the interlock set at the bottom of the circuit breaker panel, applies 120/208 VAC power to the panel board bus. Setting the circuit breaker to the **ON** position readies the SDC to deliver power to all loads connected to it. Setting the circuit breaker to the **OFF** position shuts down the entire SDC.

1.2.3. Mission Essential Circuit Breaker. The mission essential circuit breaker, which is the right hand breaker located under the interlock set at the bottom of the circuit breaker panel, applies 120/208 VAC power from a mission essential generator to the panel board bus in order to power essential loads when primary power is not available. This circuit breaker is used in lieu of the main circuit breaker, with the interlock set designed to prevent the simultaneous use of both.

1.2.4. Bus Energized Indicator Lights (6-25c.BMP). These indicator lights, which are located at the top-center of the circuit breaker panel, illuminate when the bus for the designated phase is energized.

1.2.5. Transformer High Temp Light. The transformer high temperature indicator light, which is located at the top-center of the circuit breaker panel, illuminates during excessively high transformer temperature. During normal operation, this light will remain out.

CAUTION:
DO NOT CONTINUE TO OPERATE THE SDC IF THE XFMR HIGH TEMP LIGHT IS IN. SERIOUS DAMAGE TO THE EQUIPMENT CAN RESULT. (THE XFMR HIGH TEMP OVERRIDE SW IS FOR MAINTENANCE PURPOSES ONLY, NOT FOR ALLOWING OPERATION WHEN EXCESSIVE HIGH TRANSFORMER TEMPERATURES ARE ENCOUNTERED).

Notice. This AFQTP is *NOT* intended to replace the applicable technical references nor is it intended to replace hands-on training. It is to be used in conjunction with these for training purposes only.

1.2.6. Transformer High Temp Override Switch. This two-position toggle switch, located at the top-center of the circuit breaker panel, permits closing the main circuit breaker to apply primary power to the transformer (**OVERRIDE** position) after the circuit breaker has been tripped due to excessive transformer temperature. During all operating conditions, the override switch must be maintained in the **NORMAL** position.

1.2.7. Branch Circuit Breakers. The sixteen branch circuit breakers, running up the left and right hand sides of the circuit breaker panel, control the application of 120/208 VAC secondary power to the sixteen feeder receptacles for distribution to shelters and other loads.

1.2.8. Ground Fault Circuit Breakers. The two ground fault circuit breakers, both of which are located on the lower right hand side of the circuit breaker panel directly above the interlock set, control the application of 120 VAC power to the two convenience outlets.

CAUTION:

DO NOT ENERGIZE THE MEP GENERATOR UNTIL POST-INSTALLATION MISSION ESSENTIAL MODE CHECKS DESCRIBED IN PARAGRAPH 3 OF THIS AFQTP HAVE BEEN CONDUCTED FOR THE SDC, THE SECONDARY CABLE ASSEMBLIES, AND THE LOADS THEMSELVES. FAILURE TO COMPLETE POST-INSTALLATION CHECKS MAY RESULT IN DANGER TO INSTALLING PERSONNEL.

2. Emergency Operation. In an emergency situation such as loss of primary power, it is possible to operate Mission Essential Equipment with power from a MEP generator (208 VAC). MEP generators should be connected to SDCs providing power to essential equipment and/or facilities at all times, although the generator is not running. When such an emergency occurs, proceed as follows:

Step 1: Immediately place all branch circuit breakers in the OFF position.

Step 2: Set the Main Circuit Breaker to the OFF position.

Step 3: Position the mechanical circuit breaker interlock to lock out the main circuit breaker.

Step 4: Start the MEP generator (refer to the applicable generator T.O.).

Step 5: When the generator is operating properly and delivering power to the SDC, set the Mission Essential Breaker to the ON position. The bus-energized lights in the SDC will come on.

Step 6: Set all of the branch circuit breakers that support critical equipment and/or facilities to the ON position.

Step 7: When primary power is again available, set the Mission Essential and all feeder receptacle breakers to the OFF position. Position the mechanical circuit breaker control interlock to lock out the Mission Essential circuit breaker.

3. When it is necessary that certain equipment be used before primary power is available or a power failure, and the Mission Essential Generator has been connected to the SDC mission essential receptacle using the Mission Essential cable assembly, make the checks listed below before energizing the Secondary Power System.

Notice. This AFQTP is *NOT* intended to replace the applicable technical references nor is it intended to replace hands-on training. It is to be used in conjunction with these for training purposes only.

Step 1: Check that the SDC is properly grounded.

Step 2: Check all Mission Essential loads to be sure the Secondary Cable Assembly input connections are firmly in place in the load input receptacles.

Step 3: Check that mating ends of Secondary Cable Assemblies linking the loads with the SDC have been connected properly.

Step 4: Check that output connectors to the loads on the SDC are firmly in place in the feeder receptacles.

Step 5: Check that all branch circuit breakers are OFF.

Step 6: Check that the mission essential circuit breaker, (CKT BKR MISSION ESSENTIAL) is OFF.

Step 7: Check that the main circuit breaker, (XFMR CKT BKR MAIN) is OFF. Position the mechanical circuit breaker interlock to lock out the main circuit breaker.

Step 8: Deploy MEP generator to the site and ground unit.

Step 9: Connect the 60-amp poser cable into the receptacles of the generator and the SDC. There no need to check phase rotation. It is already set-up properly.

Step 10: Check that the MEP generator is ready to operate (refer to the applicable TO for MEP generator). The system is now ready for initial turn-on in the Mission Essential mode.

CAUTION:
TO PROTECT PERSONNEL FROM INJURY, BE SURE THAT THE MISSION ESSENTIAL GENERATOR IS PROPERLY GROUNDED.

4. ***After completing this AFQTP see your Unit Education and Training Manager to take the mandatory CerTest # 8128. Trainee must score at least 80% to meet the minimum completion requirements for diamond tasks.***

5. If the equipment is available, then perform the above steps for your hands-on certification:

Notice. This AFQTP is *NOT* intended to replace the applicable technical references nor is it intended to replace hands-on training. It is to be used in conjunction with these for training purposes only.

REVIEW QUESTIONS
FOR
CONNECT GENERATOR TO SDC

QUESTION	ANSWER
1. There are times during a deployment when Mission Essential Generators must be used as a power source for SDCs because primary power is not yet available. In such instances, as part of the Mission Essential Mode Check conducted prior to energizing the secondary distribution system, ensure that all branch circuit breakers on the SDC are in the **ON** position.	a. True. b. False.
2. The SDC contains a total of _____ 100 Amp branch circuit breakers.	a. eight b. sixteen c. twenty d. twenty four
3. The secondary side of the SDC reduces the 4,160 VAC primary voltage to:	a. 220/440 volts. b. 120/208 volts. c. 240/416 volts. d. 110/220 volts.

Notice. This AFQTP is *NOT* intended to replace the applicable technical references nor is it intended to replace hands-on training. It is to be used in conjunction with these for training purposes only.

CONNECT GENERATOR TO SDC

PERFORMANCE CHECKLIST

INSTRUCTIONS:

The trainee must satisfactorily perform all parts of the task without assistance. Evaluate the trainee's performance using this checklist.

DID THE TRAINEE….?	YES	NO
1. Check the SDC for grounding		
2. Check the all mission loads to ensure they were firmly in place		
3. Check the mating ends of secondary cables assemblies for proper connections		
4. Check output connectors to ensure they are firmly in place		
5. Turn **OFF** all branch circuit breakers		
6. Turn **OFF** the mission circuit breaker (CKT BKR MISSION ESSENTIAL)		
7. Turn **OFF** the main circuit breaker (XFMR CKT BKR MAIN)		
8. Position the mechanical circuit breaker interlock to lock out the main circuit breaker.		
9. Ground the MEP generator		
10. Connect the 60-amp poser cable into the receptacles of the generator and the SDC		
11. Start the MEP generator		
12. Check MEP generator for proper operation IAW applicable TO		
13. Turn **ON** the mission essential breaker		
14. Turn **ON** all branch circuit breakers that support critical equipment and/or facilities		
15. Comply with all safety requirements		

FEEDBACK: Trainer should provide both positive and/or negative feedback to the trainee immediately after the task is performed. This will ensure the issue is still fresh in the mind of both the trainee and trainer.

Notice. This AFQTP is *NOT* intended to replace the applicable technical references nor is it intended to replace hands-on training. It is to be used in conjunction with these for training purposes only.

Air Force Civil Engineer

QUALIFICATION TRAINING PACKAGE (QTP)

REVIEW ANSWER KEY

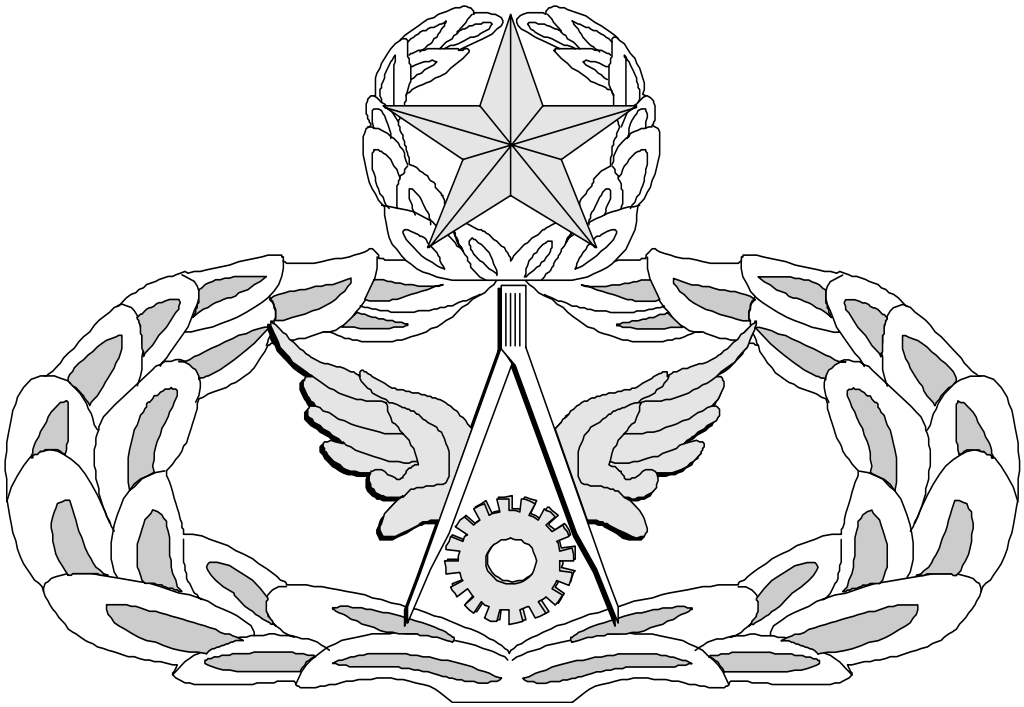

FOR

ELECTRICAL POWER PRODUCTION

(3E0X2)

MODULE 28

AFSC SPECIFIC CONTINGENCY RESPONSIBILITIES

Notice. This AFQTP is *NOT* intended to replace the applicable technical references nor is it intended to replace hands-on training. It is to be used in conjunction with these for training purposes only.

CONFIGURE FOR PROPER VOLTAGE
(3E0X2-28.1.1.1.4.)

QUESTION	ANSWER
1. Where would you change the voltage on a MEP-007B?	a. Reconnection board assembly.
2. Where would you fine tune the voltage on a MEP-007B?	d. Voltage adjust control.
3. What are the typical voltage ranges on tactical units (less than 200Kw)?	b. 120/208 or 240/416.
4. What safety pre-caution must you observe before changing the voltage on any generator?	c. Always ensure generator is turned off.
5. How is the alternator wired to produce 120/208 Volts?	b. Parallel.

CONNECT CABLES
(3E0X2-28.1.1.1.5.3.)

QUESTION	ANSWER
1. You have been tasked to install a generator at bldg.111. What is the first thing you should do?	d. Both b & c.
2. What step must be taken prior to connecting leads to the load terminal board of a MEP 007B?	c. Remove safety cover.
3. Load cables should always be installed through generator access doors.	b. False.
4. It is safe to install MEP 007 load cables by hand if generator is off.	a. True.
5. You have just finished installing the load cables between the generator and the facility, what should be your next step?	c. Check for proper phase sequence.

Notice. This AFQTP is *NOT* intended to replace the applicable technical references nor is it intended to replace hands-on training. It is to be used in conjunction with these for training purposes only.

PERFORM PRE-OPERATIONAL INSPECTION
(28.1.1.2.1.)

QUESTION	ANSWER
1. What is the purpose of the Pre-operational inspection?	a. Ensure that the generator set is capable of operating.
2. What is the first thing you need to check prior to performing a pre-operational check?	d. Generator Log.
3. What is one of the most important steps when performing an operational check?	b. Grounding.
4. Why do need to be cautious when working on batteries?	a. The acid in the electrolyte solution can cause severe burns.
5. When is the cooling level check?	d. During pre-operational check.
6. How are belts tension checked?	a. Using the back of the hand.
7. What indicates the proper operation of the press-to-test lights?	a. When press-to-test lights are depressed.
8. What document is used to document generator operation and maintenance actions for that particular generator?	b. AF Form 487.

PERFORM DURING OPERATION INSPECTION
(3E0X2-28.1.1.2.2.)

QUESTION	ANSWER
1. Generator documentation is standard throughout the Air Force?	a. True.
2. Why is good record keeping essential to equipment analysis?	d. Both a and b.
3. What is the importance or reason for maintaining generator operations logs?	d. All of the above.
4. Which form is used for standby plants or RPIE and EAID generators requiring bi-hourly monitoring?	c. AF Form 487, Emergency Generator Operating Log.
5. Which form should be maintained for each RPIE and EAID generator for the purpose of documenting engine hours and maintenance performed?	a. AF Form 719, Historical Record Diesel Electric Generators.

Notice. This AFQTP is *NOT* intended to replace the applicable technical references nor is it intended to replace hands-on training. It is to be used in conjunction with these for training purposes only.

PERFORM POST-OPERATIONAL INSPECTION
(3E0X2-28.1.1.2.3.)

QUESTION	ANSWER
1. When is a post-operational inspection performed?	a. Once the set has been shut off and allowed to cool.
2. What is the purpose of the post-operational inspection?	b. It is to service the generator set and make it ready for future operation.
3. When does condensation not normally form in a generator set?	c. When the generator set is operating.
4. Why should you be cautious on generator models equipped with both a "run" and "stop" sided dipstick?	a. To avoid over filling system with oil.
5. What is the golden rule of any power production person?	a. “NEVER RUN OUT OF FUEL.”
6. When do you check the coolant?	a. Once the generator set has completely cooled down.
7. Over a period of time what will reduce the life span of the battery?	a. A low electrolyte level.
8. What should you do if you find discrepancies after performing a post-operational inspection?	d. All of the above.

PERFORM SINGLE UNIT OPERATION
(3E0X2-28.1.1.2.5.)

QUESTION	ANSWER
1. What is the fundamental stepping block prior to operating the units in parallel?	a. Single unit operation.
2. You should never start a unit:	a. until a pre-operation inspection is done
3. How long should let the generator run before applying load?	b. 5 minutes.
4. How do you apply load to the tactical generator?	d. Close the load contactor.
5. How do know that the load contactor is closed?	b. Load contactor indicator light illuminates.
6. How do remove load from the generator?	c. Open the load contactor.

Notice. This AFQTP is *NOT* intended to replace the applicable technical references nor is it intended to replace hands-on training. It is to be used in conjunction with these for training purposes only.

PERFORM PARALLEL UNIT OPERATION
(3E0X2-28.1.1.2.6.)

QUESTION	ANSWER
1. What are the four factors involved in paralleling generators?	b. Frequency, voltage, phase sequence and phase relationship.
2. How are the two parallel units identified?	a. Running and incoming.
3. When is the load circuit breaker closed on the incoming unit?	c. The paralleling lights extinguish.
4. How many minutes do you allow the engine to cool down before shutting down the unit?	c. 5.

CONNECT GENERATOR TO SDC
(3E0X2-28.4.2.3.2.)

QUESTION	ANSWER
1. There are times during a deployment when Mission Essential Generators must be used as a power source for SDCs because primary power is not yet available. In such instances, as part of the Mission Essential Mode Check conducted prior to energizing the secondary distribution system, ensure that all branch circuit breakers on the SDC are in the **ON** position.	b. False.
2. The SDC contains a total of _____ 100 Amp branch circuit breakers.	b. sixteen
3. The secondary side of the SDC reduces the 4,160 VAC primary voltage to:	b. 120/208 volts.

Notice. This AFQTP is *NOT* intended to replace the applicable technical references nor is it intended to replace hands-on training. It is to be used in conjunction with these for training purposes only.

MEMORANDUM FOR HQ AFCESA/CEOF
139 Barnes Drive Suite 1
Tyndall AFB, FL 32403-5319

FROM:

SUBJECT: Qualification Training Package Improvement

1. Identify module.

   Module # and title_____

2. Identify improvement/correction section(s):

   _____ STS Task Reference
   _____ Training Reference
   _____ Evaluation Instructions
   _____ Performance Resources
   _____ Steps in Task Performance
   _____ Performance Checklist
   _____ Feedback
   _____ Format
   _____ Other

3. Recommended changes--use a continuation sheet if necessary.

   _____
   _____
   _____
   _____
   _____
   _____
   _____
   _____
   _____

4. You may choose to call in your recommendations to DSN 523-6392 or FAX DSN/Commercial 523-6488 or (850) 283-6488 or email ceof.helpdesk@tyndall.af.mil.

5. Thank you for your time and interest.

YOUR NAME, RANK, USAF
Title/Position